Dell Networking C9010
Getting Started Guide

Regulatory Model: C9010

Notes, Cautions, and Warnings

NOTE: A NOTE indicates important information that helps you make better use of your computer.

CAUTION: A CAUTION indicates either potential damage to hardware or loss of data and tells you how to avoid the problem.

WARNING: A WARNING indicates a potential for property damage, personal injury, or death.

Copyright © 2015 Dell Inc. All rights reserved. This product is protected by U.S. and international copyright and intellectual property laws. Dell™ and the Dell logo are trademarks of Dell Inc. in the United States and/or other jurisdictions. All other marks and names mentioned herein may be trademarks of their respective companies.

2015 - 08

Rev. A00

1

About This Guide

This document provides information about how to install a C9010 switch with the base configuration in a rack, perform an initial software configuration, and connect to a network. For complete information about C9010 installation and configuration, refer to these documents:

Table 1. C9010 Documentation

Information	Documentation
Hardware installation, power-up instructions, initial software configuration, and network connection	*Dell Networking Installation Guide for the C9010 Switch*
Software configuration	*Dell Networking Configuration Guide for the C9000 Series*
Command-line interface	*Dell Networking Command Line Reference Guide for the C9000 Series*
Latest updates	*Dell Networking Release Notes for the C9010 Switch*

2

C9010 Hardware Description

The C9010 switch is part of Dell Networking's next-generation LAN solution, providing a scalable switch that offers a path to higher density 10GbE and 40GbE capability. You can deploy the C9010 switch as an access or aggregation/core switch for installations in which a modular switch is preferred. For larger port requirements, you can also connect C1048P port extenders as access devices.

The C9010 switch supports up to two hundred and forty-eight 1GbE, two hundred and forty-eight 10GbE, or sixty 40GbE ports with a combination of port speeds and media types, such as copper, fiber, and direct attach copper (DAC). It is an 8U chassis (18”/45.72 cm depth) that fits into a standard 19”/48.26 cm rack or cabinet. The C9010 chassis supports the following components:

- Two full-width route processor modules (RPMs) with four 1/10GbE SFP+ uplinks per module
- Ten half-width Ethernet line cards of the following types:
  - 6-Port 40 Gigabit Ethernet QSFP+
  - 24-Port 1/10 Gigabit Ethernet SFP+
  - 24-Port 1/10 Gigabit Ethernet Base-T RJ-45
- Three hot-swappable fan modules with side-to-side airflow (draws air through ventilation holes on the right side of the chassis and expels air through ventilation holes on the left side)
- Four 1450/2900 watt AC power supply units (PSUs)

The slot numbers of all installed components are shown in the following figure.

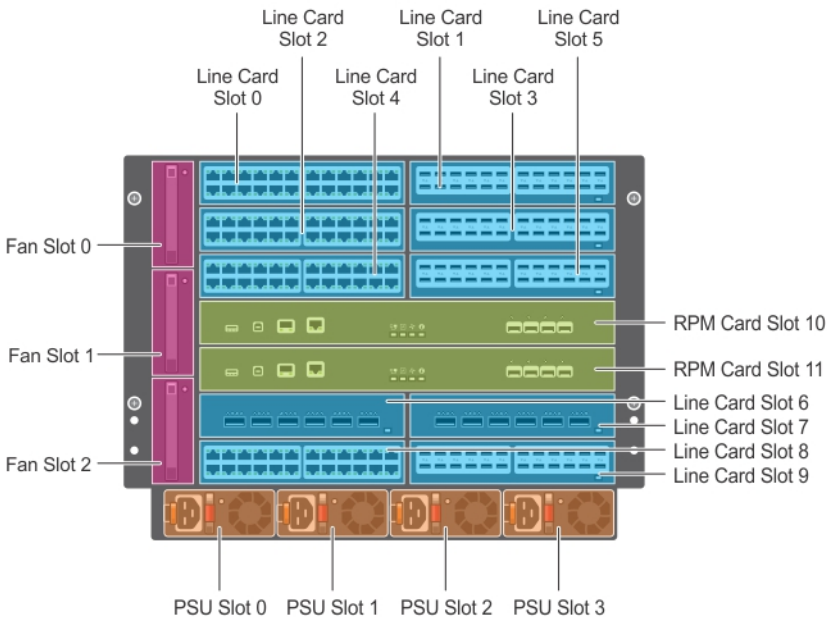

Figure 1. C9010 Chassis — Installed Components with Slot Numbers

Unpacking the Switch

The switch and its accessories are shipped in a single container. Before unpacking the switch, inspect the container and immediately report any evidence of damage. Verify that you have received your ordered items. If any item is missing or damaged, contact your Dell Networking representative or reseller for assistance.

CAUTION: Always wear an electrostatic discharge (ESD)-preventive wrist or heel ground strap when handling the switch and its components. Ground yourself by using an antistatic wrist strap or other device and connect it to the ESD grounding jack on the chassis. As with all electrical devices of this type, take all necessary safety precautions to prevent injury when installing this system.

CAUTION: Use an equipment lift or pallet jack to lift the shipping container with the chassis. Lifting the system by its shelves causes damage to the chassis.

Unpack the C9010 by carefully removing the device from the container and place it on a secure and clean surface.

The base C9010 configuration package consists of:

- One C9010 chassis
- One full-width C9000 Series RPM
  - `C9000-RPM-2.56T` is displayed in SW output.
  - `07KPC3` is on the HW label.
- Three C9000 Series fan modules
  - `C9000-FAN` is displayed in SW output.
  - `0C94MF` is on the HW label.
- One AC PSU (110-230V switching)
  - `C9000-PWR-AC-R` is displayed in SW output.
  - `D3000E-S0` is on the HW label.
- AC power cord (IEC 60320 C19 cable)
- One DB-9 to RJ-45 serial console cable
- One rack bar with four screws and washers
- Eight cage nuts (four for the rack bar; four for the chassis thumb screws)
- Blank panels: one RPM, three PSU, and nine half-width line card blanks
- Two cable management brackets
- *C9010 Getting Started Guide*
- *Safety and Regulatory Information*
- *Warranty and Support Information*
- *Software License Agreement*

In addition, you can order the following items:

- Up to three additional PSUs for redundancy or additional power
- Half-width line cards:
  - 6-Port 40 Gigabit Ethernet QSFP+ (`C9000LC0640` is displayed in SW output.)
  - 24-Port 1/10 Gigabit Ethernet SFP+ (`C9000LC2410G` is displayed in SW output.)
  - 24-Port 1/10 Gigabit Ethernet Base-T RJ-45 (`C9000LC2410T` is displayed in SW output.)
- SFP+ optics
- QSFP+ optics
- SFP+ direct attach copper (DAC) cables
- QSFP+ DAC cables
- DB-9 adapter
- Dell ReadyRails™ kit (#1 and #2 Phillips and flat-tipped screwdrivers required) with four cage nuts
- Rack mount tray
- C1048P port extenders (PEs) for use with the C9010

Before You Start: Site Preparation

Before installing the C9010 switch, make sure that your installation site meets these requirements:

- **Clearance**: Ensure there is adequate space in front of the switch so you can read the light-emitting diodes (LEDs) and adequate space around and behind the chassis for cabling, power connections,

airflow, and ventilation. Make sure that the AC power cord can reach the power connector on the front panel of a power supply unit from the power outlet.

- **Airflow**: On the C9010, airflow is from the right to the left side as you face the switch. Hot air is expelled from the left side. Ensure that airflow around the switch and through the side vents is unobstructed and that hot exhaust is not used as air intake on the right side.
- **Temperature**: The ambient temperature around the operating switch should not exceed 113°F (45°C). If the switch is in a closed or multi-rack assembly, the temperature might be higher than normal room temperature.
- **Cabling**: The cabling should be routed to avoid sources of electrical noise, such as radio transmitters, broadcast amplifiers, power lines, and fluorescent lighting fixtures. Make sure that the cabling is safely away from other devices that might damage the cables. If needed, allow 1 RU between devices to provide room for cabling.
- **Altitude**: Altitude at the installation site is below 10,000 feet (3048 m).
- **Humidity**: The relative humidity around the operating switch is between 5% and 95% (non-condensing) with 91°F (33°C) maximum dew point.
- **Dust**: The switch is installed in an environment as free as possible from dust and foreign conductive material (such as metal flakes from construction activities). Cooling mechanisms, such as fans in the switch, can draw dust and other particles inside the chassis, which can result in system malfunction.

3

Installing the Hardware

To install the C9010 chassis and power up the switch:

1. Install the C9010 chassis in a 2- or 4-post rack using the rack bar and mounting brackets shipped with the chassis, or use an optional rack mount tray or Dell ReadyRails kit.
2. Secure the chassis ground.
3. Install the fan modules.
4. Install RPMs and line cards.
5. Install the power supplies and power cables.
6. Install the cable management system.
7. Install the QSFP+ and SFP+ optics.
8. Connect the power and power up the system.

WARNING: Due to the weight of a fully populated C9010 chassis, remove each component before you install or remove the chassis.

After you install the switch in a rack and power it up, perform the initial software configuration and connect the switch to a network as described in Configuring the Software.

Installing the Chassis in a Two-Post Threaded-Hole Rack

You can install the chassis in a 2-post threaded-hole rack by following the tooled procedure in this section. A flat-head and a Philips screwdriver are necessary.

WARNING: Use two people, an equipment lift, or pallet jack when lifting or moving the chassis. Install the chassis into the rack before inserting the chassis components. Lift the C9010 chassis only from the bottom. Lifting by the chassis shelves or power supply openings might damage the chassis.

WARNING: To prevent bodily injury when mounting or servicing this unit in a rack, take special precautions to ensure that the system remains stable. The following guidelines are provided to ensure your safety:

- If your chassis is the only unit in the rack, mount it at the bottom of the rack.
- When mounting this unit in a partially filled rack, load the rack from the bottom to the top with the heaviest component at the bottom of the rack.
- If the rack is provided with stabilizing devices, install the stabilizers before mounting or servicing the unit in the rack.
- If the chassis is shipped with blanks, remove the blanks from each RPM, line card, fan module and PSU slot before lifting the chassis.

1. (Optional) The C9010 chassis is designed to fit into a rack enclosure with the front door closed. If you plan to use cable management brackets (see Installing the Cable Management System) and

close the front door, re-position and fasten the front rack posts 6.5 inches (165 mm) back towards the rear of the rack to leave space for the brackets.

2. Determine the height at which you want to mount the chassis in the equipment rack.
3. Install the rack bar on the front posts just below the desired height of the bottom of the chassis. The rack bar requires 1 RU below the chassis.

   Use the rack bar as a guide to mount the chassis. It is not required to support the weight of the chassis; you can remove it when the chassis is securely mounted in the rack.

   Hold the rack bar (item 1 in Figure 2) so that the smooth side faces outward and the arrows point upward. Attach the bar to the front-rack posts using the mounting screws and washers provided with the rack bar (items 2 and 3 in Figure 2).

   NOTE: The installation procedure in this section describes how to install the C9010 in a 2-post rack using the rack bar provided in the base configuration package. For information about how to use Dell ReadyRails or a rack mount tray to install the C9010, follow the instructions in Installing Dell ReadyRails or Installing a Rack Mount Tray. Then continue with Step 4.

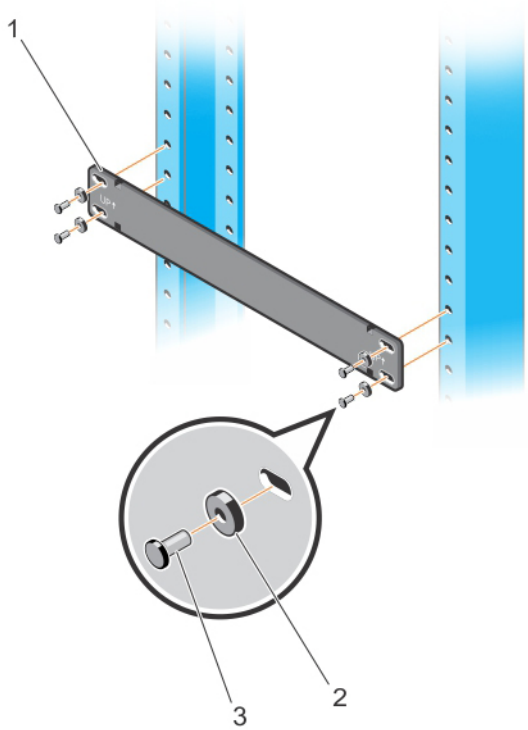

Figure 2. Installing a Rack Bar in a 2-Post Rack

4. Using a flat-head screwdriver, remove the bracket screws (item 1 in Figure 3) and unscrew the thumb screws to remove the bracket (item 2 in Figure 3) attached to each chassis flange.

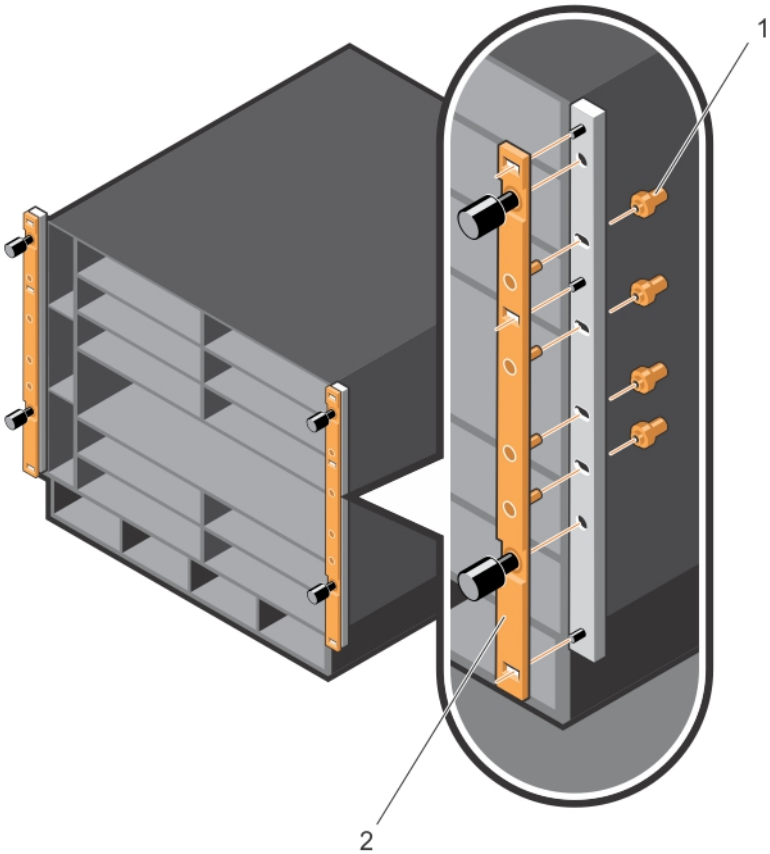

Figure 3. Removing Brackets from the Chassis

5. Use an equipment lift or two people to lift the empty chassis without blanks (item 1 in Figure 4) and align the rack-mount screw holes on each flange of the chassis with the holes in the equipment rack. Rest the chassis on top of the rack bar (or rack tray, if installed).

   Slide the chassis so that the holes in the side flanges align with the holes in the rack posts. Tighten four rack screws (item 2 in Figure 4) on each chassis flange to attach the chassis to the rack posts. Tighten each group of rack screws by starting with the bottom screw and working up.

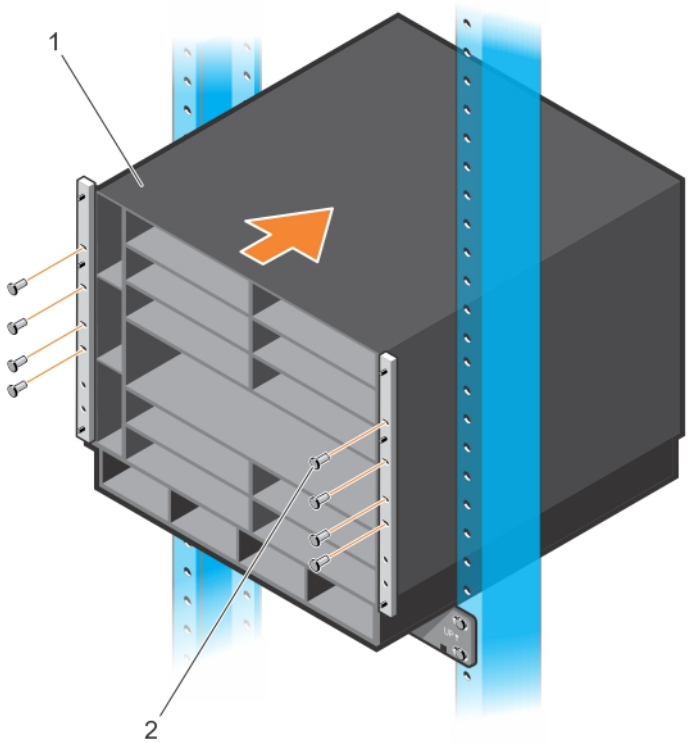

Figure 4. Mounting the Chassis into a 2-Post Rack

6. Verify that the chassis is securely installed in the two rack posts and does not sag. To prevent sagging, support the back of the chassis by using a rack mount shelf or Dell ReadyRails as described in Step 3.

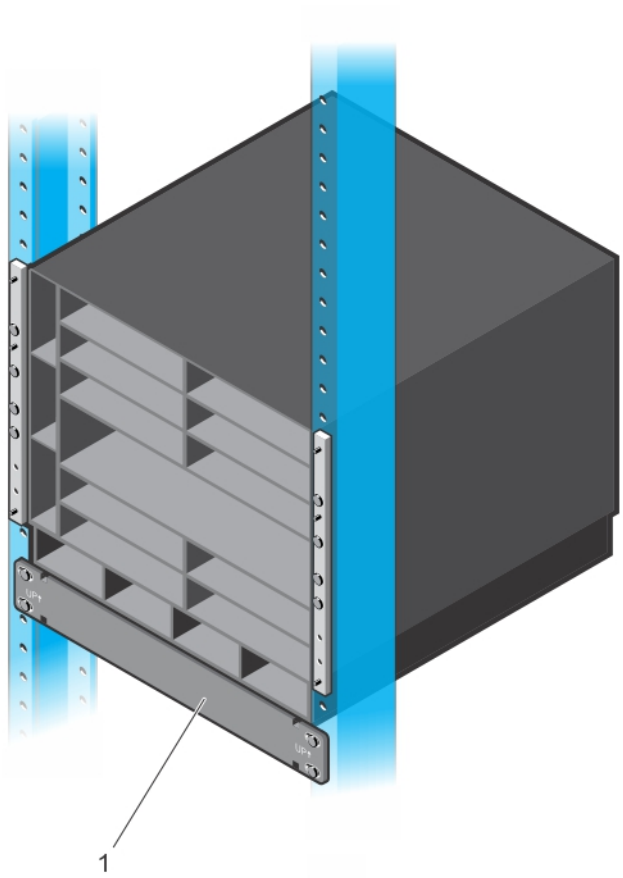

Figure 5. Chassis Installed in a 2-Post Rack

NOTE: To allow for increased airflow, you can remove the rack bar from the front posts.

Installing the Chassis in a Four-Post Rack

You can install the C9010 chassis in a 4-post round- or square-hole rack by following the tool-less procedure in this section or in a 4-post threaded-hole rack by following a tooled procedure. The illustrations in this section show how to install the chassis in a 4-post square-hole rack using a tool-less procedure.

WARNING: Use two people, an equipment lift, or pallet jack when lifting or moving the chassis. Install the chassis into the rack before inserting the chassis components. Lift the C9010 chassis only from the bottom. Lifting by the chassis shelves or power supply openings might damage the chassis.

WARNING: To prevent bodily injury when mounting or servicing this unit in a rack, take special precautions to ensure that the system remains stable. The following guidelines are provided to ensure your safety:

- If your chassis is the only unit in the rack, mount it at the bottom of the rack.
- When mounting this unit in a partially filled rack, load the rack from the bottom to the top with the heaviest component at the bottom of the rack.
- If the rack is provided with stabilizing devices, install the stabilizers before mounting or servicing the unit in the rack.
- If the chassis is shipped with blanks, remove the blanks from each RPM, line card, fan module and PSU slot before lifting the chassis.

1. (Optional) The C9010 chassis is designed to fit into a rack enclosure with the front door closed. If you plan to use cable management brackets (Installing the Cable Management System) and close the front door, re-position and fasten the front rack posts 6.5 inches (165 mm) back towards the rear of the rack to leave space for the brackets.
2. Determine the height at which you want to mount the chassis in the rack.

3. Install the rack bar on the front posts just below the desired height of the bottom of the chassis. The rack bar requires 1 RU below the chassis.

   Use the rack bar as a guide to mount the chassis. It is not required to support the weight of the chassis; you can remove it when the chassis is securely mounted in the rack. To install the rack bar, first insert two cage nuts (item 2 in Figure 6) into each post at the desired height.

   Hold the rack bar (item 1 in Figure 6) so that the smooth side faces outward and the arrows point upward. Align the holes in the rack bar with the cage nuts in the posts. Attach the bar to the front-rack posts using the mounting screws and washers shipped with the rack bar (items 3 and 4 in Figure 6). Tighten each screw to secure the rack bar to the posts.

   NOTE: The installation procedure in this section describes how to install the C9010 in a 4-post rack using the rack bar provided in the base configuration package. For information about how to use Dell ReadyRails or a rack mount tray to install the C9010, follow the instructions in Installing Dell ReadyRails or Installing a Rack Mount Tray. Then continue with Step 4.

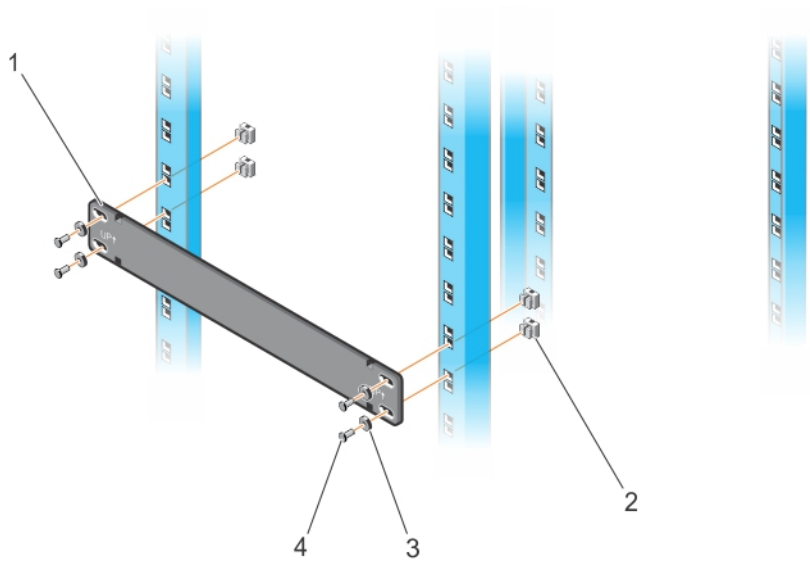

Figure 6. Installing a Rack Bar in a 4-Post Rack

4. To install the chassis, first insert four cage nuts into the front rack posts at the same height as the thumb screws on each chassis flange.

   On each post, install the lower cage nut in the top post hole 3 RUs above the rack bar; install the upper cage nut in the bottom post hole 5 RUs above the lower cage nut (8 RUs above the rack bar). Refer to Figure 7.

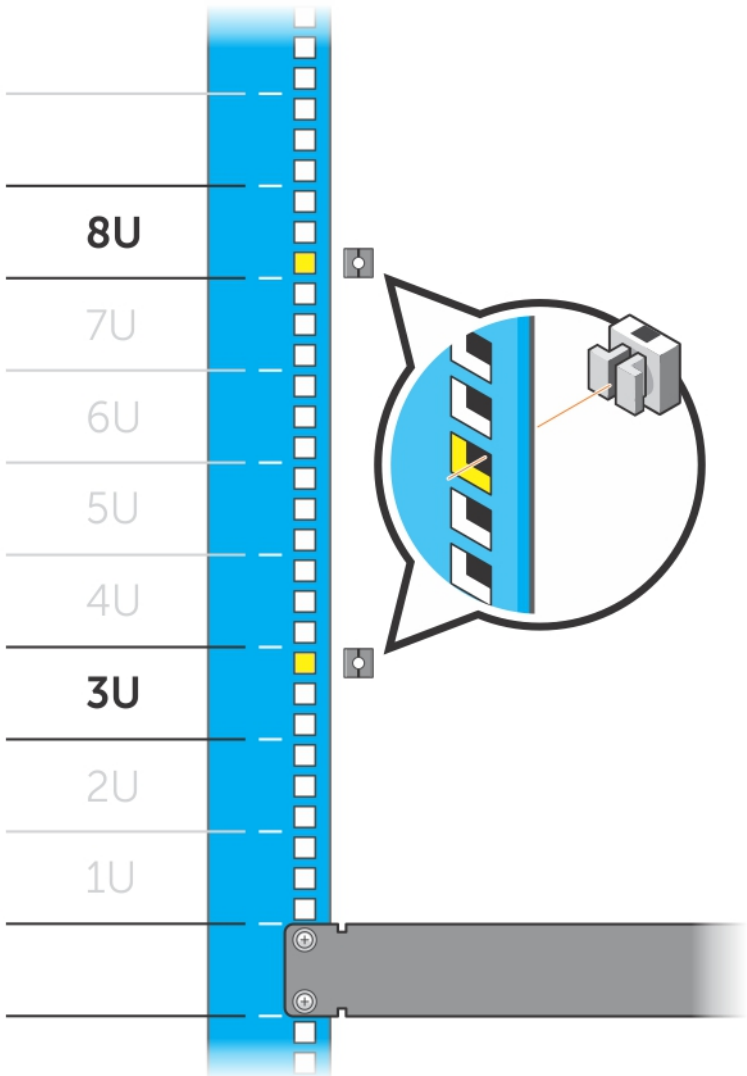

Figure 7. Installing Cage Nuts in a 4-Post Rack Before Mounting the Chassis

5. Use two people or an equipment lift to align the chassis rack-mount holes with the cage nuts in the front posts (items 1 and 2 in Figure 8). Rest the chassis on top of the rack bar (or rack tray or ReadyRails, if installed).

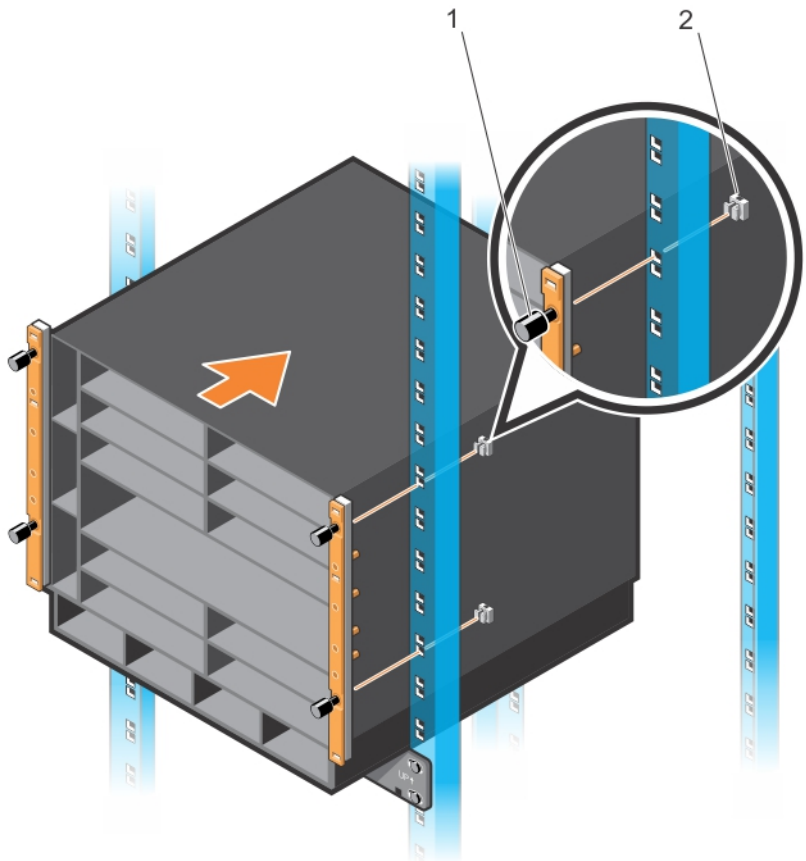

Figure 8. Aligning Rack-Mount Holes with 4-Post Rack Holes

6. Lift and slide the chassis so that the holes on the chassis flanges touch the holes in the rack posts with cage nuts. Use the rack bar (item 1 in Figure 9) as a guide.

   First tighten the bottom thumb screw on each flange; then tighten the top thumb screw.

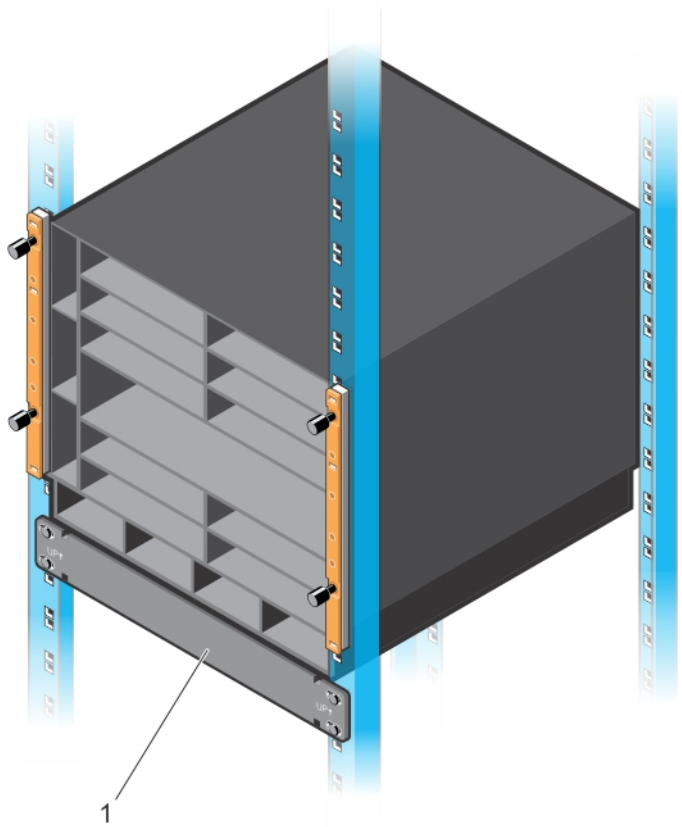

Figure 9. Chassis Installed in a 4-Post Rack

NOTE: To allow for increased airflow, you can remove the rack bar from the front posts.

Using Dell ReadyRails (Optional)

Dell Networking offers the Dell ReadyRails rack mounting system as an option to ease the installation of a switch in a 2-post or 4-post rack. You must order a ReadyRails kit as a separate item; it is not part of the C9010 base configuration.

You can install Read Rails using a tool-less method in a non-threaded-hole rack or a tooled method in a threaded-hole rack. Dell ReadyRails support a rack depth of 24 to 30 inches.

WARNING: Due to the weight of a fully populated C9010 chassis, never install or pull a full chassis out of a rack with ReadyRails. First remove each component before you lift or remove the chassis.

The ReadyRails kit consists of:

- Chassis rails that fit on the left and right sides of a C9010 chassis (items 1 and 2 in Figure 10)

- Left and right rail brackets that fit into the front rails on 2-post racks (items 3 and 4 in Figure 10)
- Front rails for the left and right posts of 2- and 4-post racks (items 5 and 6 in Figure 10)
- Rear rails that fit into the left and right front rails on 4-post racks (items 7 and 8 in Figure 10)
- Two spacers that allow you to secure the chassis flanges flush on the front rack posts (items 9 and 10 in Figure 10)

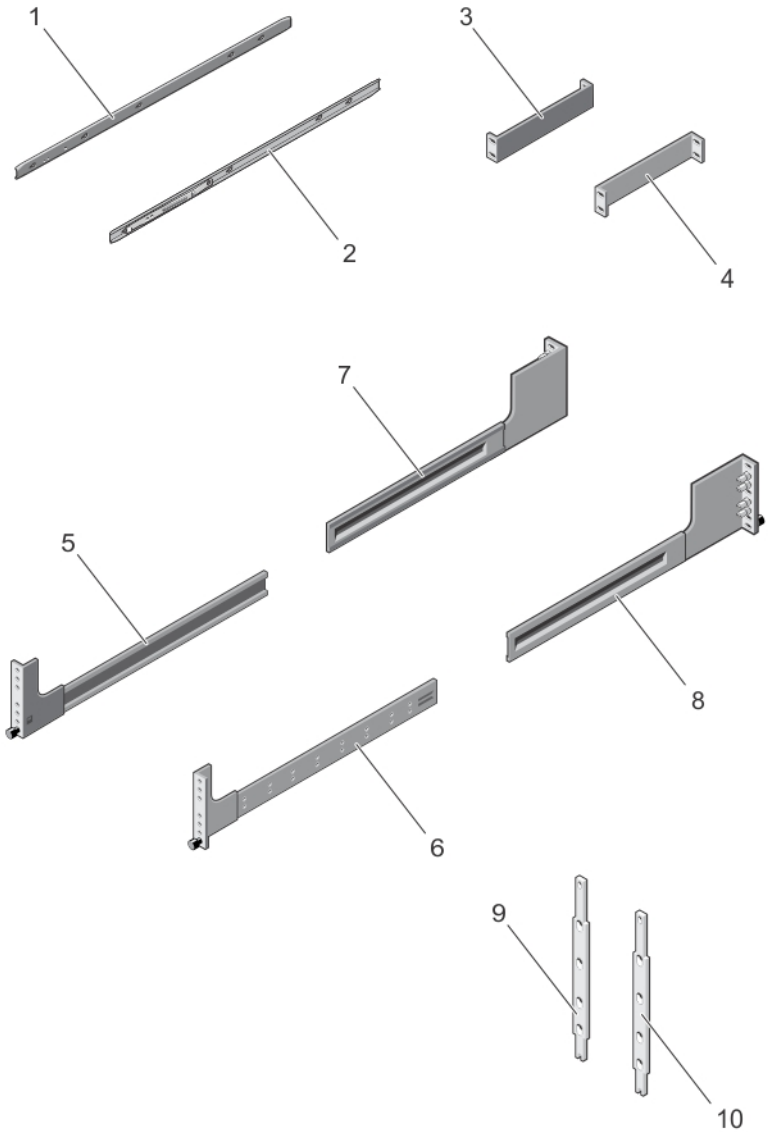

Figure 10. Dell ReadyRails for 2- and 4-Post Racks

1.	Left chassis rail	2.	Right chassis rail
3.	Left ReadyRail bracket for 2-post racks	4.	Right ReadyRail bracket for 2-post racks

5. Left front rail with attached subassembly and thumb screw
6. Right front rail with attached subassembly and thumb screw
7. Rear rail that fits into the left front rail
8. Rear rail that fits into the right front rail
9. Left spacer
10. Right spacer

Installing ReadyRails: Tool-less Method for a Non-Threaded-Hole Rack

To install ReadyRails using a tool-less method in a non-threaded 4-post rack:

1. Attach a Ready rail to the right and left sides of the rack at the desired height.

   a. Remove the front and rear parts of the left 4-post rail (items 5 and 7 in Figure 10) from the Dell ReadyRails kit and slide the parts together. (The front and rear parts of a rail may arrive pre-assembled.)
   b. Install a cage nut (item 2 in Figure 11) in the left front post at the desired height of the thumb screw on the left front rail.
   c. Install a cage nut in the left rear post at the same height as the cage nut in the left front post.
   d. Position the left rail so that the rail end labeled FRONT faces inward.
   e. Start with the rear left rail (item 3 in Figure 11); align the thumb screw with the cage nut and holes on the left rear post. Gently press the rear rail end into the rack post and tighten the thumb screw in the cage nut to secure the rail to the post.
   f. Align the thumb screw on the front left rail with the cage nut (items 1 and 2 in Figure 11) inserted in the front post. Press the front end of the rail forward and tighten the thumb screw so that it locks into the cage nut.
   g. Repeat Steps (a) through (f) to install the right rail.
   h. To remove or reposition a rail, loosen the thumb screw on each end and unseat the rail from the rack.

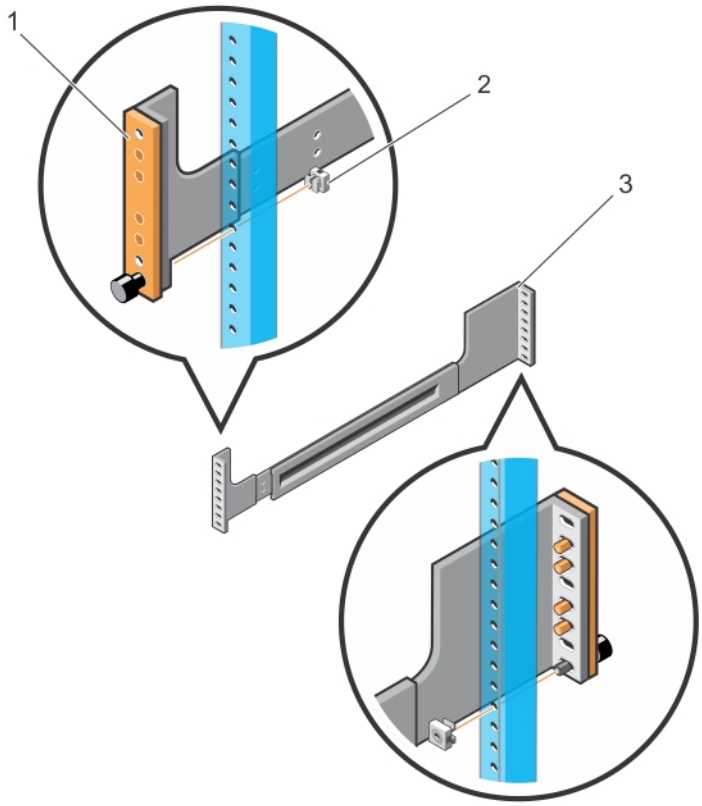

Figure 11. Installing Tool-less Rails in a Non-Threaded-Hole Rack

2. Attach the chassis rails on the right and left sides of the chassis.
   - Remove the two chassis rails (items 1 and 2 in Figure 10) from the Dell ReadyRails kit.
   - Align the holes on the right and left chassis rails with the mounting studs at the bottom of each side of the chassis (orange arrows and item 1 in Figure 12).
   - Press each chassis rail over the studs and slide it backwards (towards the back of the chassis) so that it snaps securely into place (blue arrows and item 2 in Figure 12).

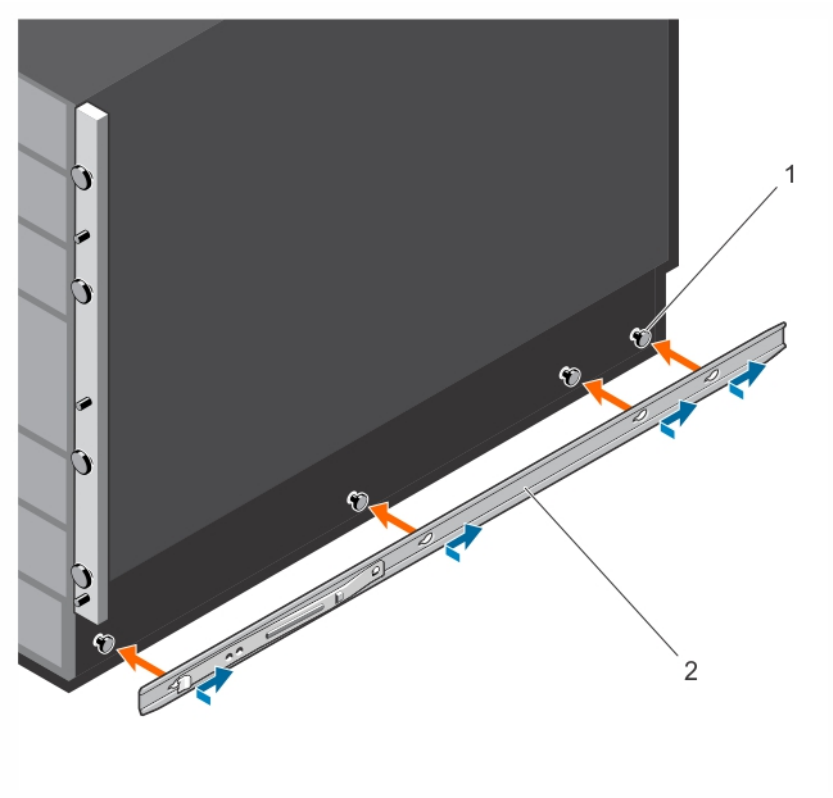

Figure 12. Installing Chassis Rail for Toolless Ready Rail Installation

3. Attach a spacer (items 9 and 10 Figure 10) to the back of each chassis flange. The spacers allow the flanges to be attached flush to each rack post.

   Place each spacer over the four pins at the back of each chassis flange. Then slide each spacer down so that it locks into place and is flush with the flange (Figure 13).

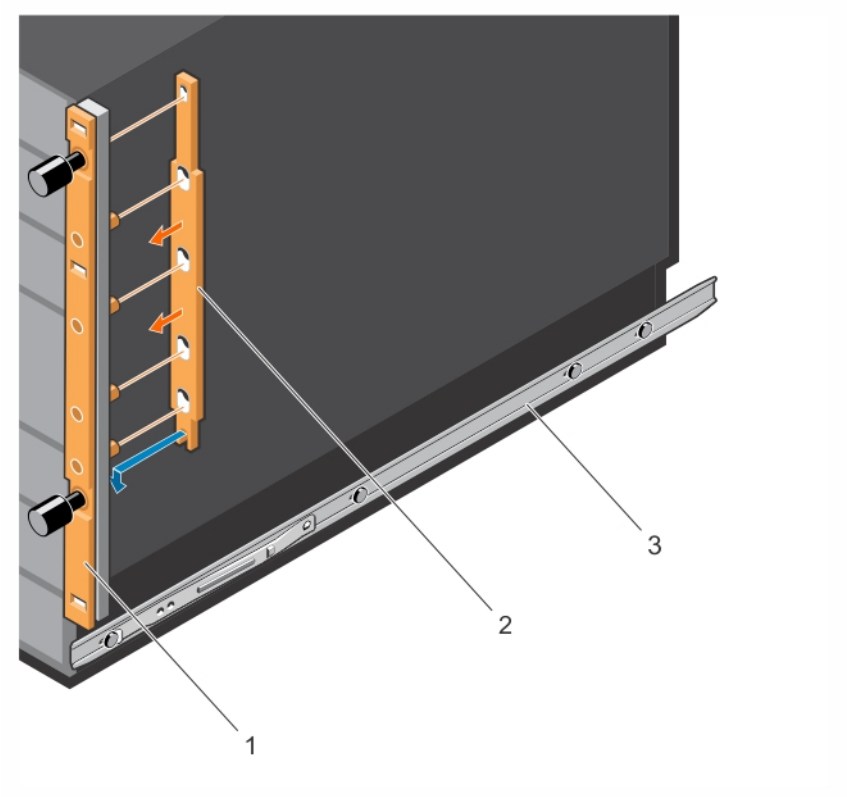

Figure 13. Installing a Spacer on a Chassis Flange

4. Install two cage nuts (item 2 in Figure 14) in each front post at the desired height of the two thumb screws on each flange. Lift the chassis and slide it into the rails installed in the rack (Figure 14). Tighten the thumb screws in the cage nuts to secure the chassis to the rack.

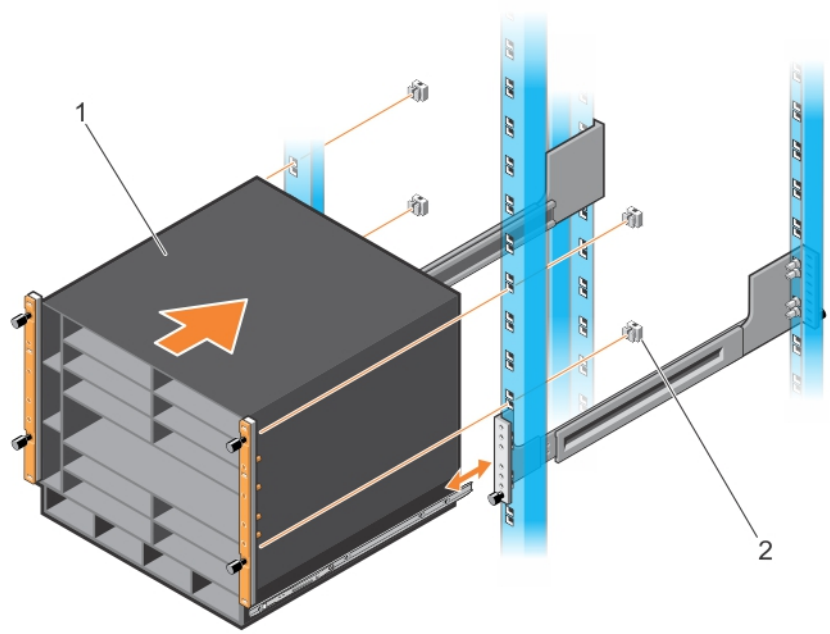

Figure 14. Installing the Chassis with ReadyRails in a Non-Threaded-Hole Rack

Installing ReadyRails: Tooled Method for a Threaded-Hole Rack

To install ReadyRails using a tooled method in a threaded-hole 2- or 4-post rack:

1. Locate the front rack rails in the Dell ReadyRails kit (items 5 and 6 in Figure 10).
   - For a 2-post rack, take out the left and right rail brackets (items 3 and 4 in Figure 10) and slide them into the front rails.
   - For a 4-post rack, take out the left and right rear rails (items 7 and 8 in Figure 10) and slide them into the front rails. (The front and rear parts of a rail may arrive pre-assembled.)

2. Using a flat-tipped screwdriver, remove the bracket subassembly and four pins (items 1, 2, and 4 in Figure 15) from the front and rear of each rail. Pull on each subassembly to fully remove it.

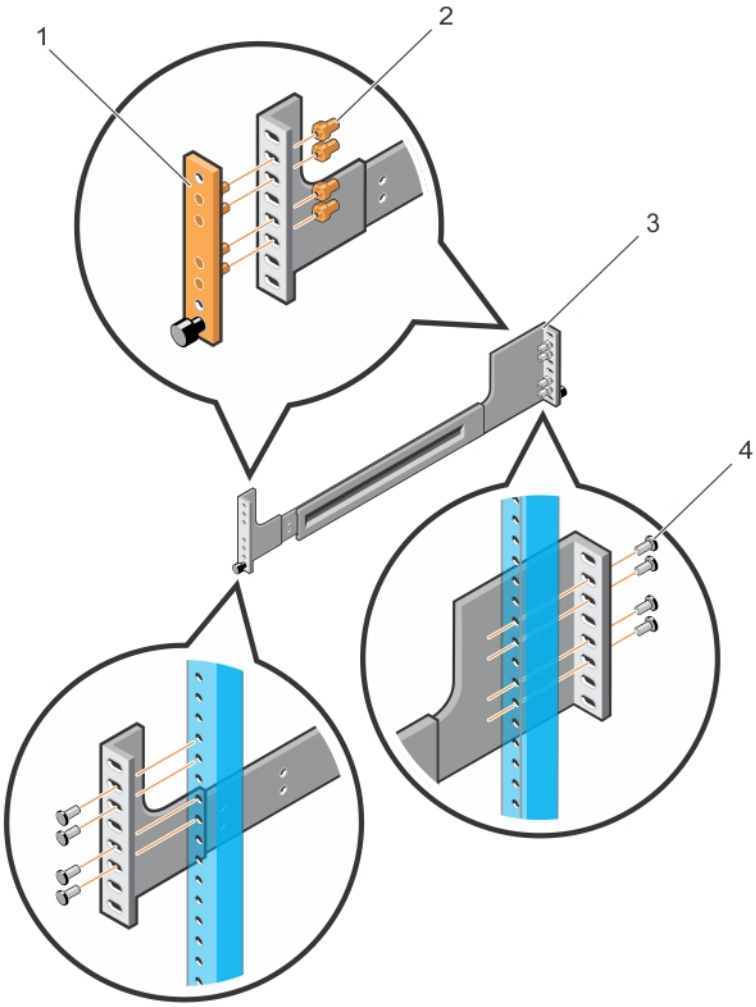

Figure 15. Installing Tooled Rails in a Threaded-Hole Rack

3. Attach the front of each rail to the front rack posts using the screws provided with the rack.

   On a 4-post rack, slide the back end of each rail so that it aligns with the back post holes at the same height. Attach each rail to a rear post using four screws provided with the rack (item 4 in Figure 15).

4. Lift the chassis and slide it into the rails installed in the rack (Figure 16). Tighten the two thumb screws and four rack screws (item 5 in Figure 15) on each flange to secure the chassis to the rack.

   On a 2-post rack, slide each rail bracket (item 4 in Figure 16) forward to the post. Tighten the two screws (item 3 in Figure 16) to secure the bracket to each post.

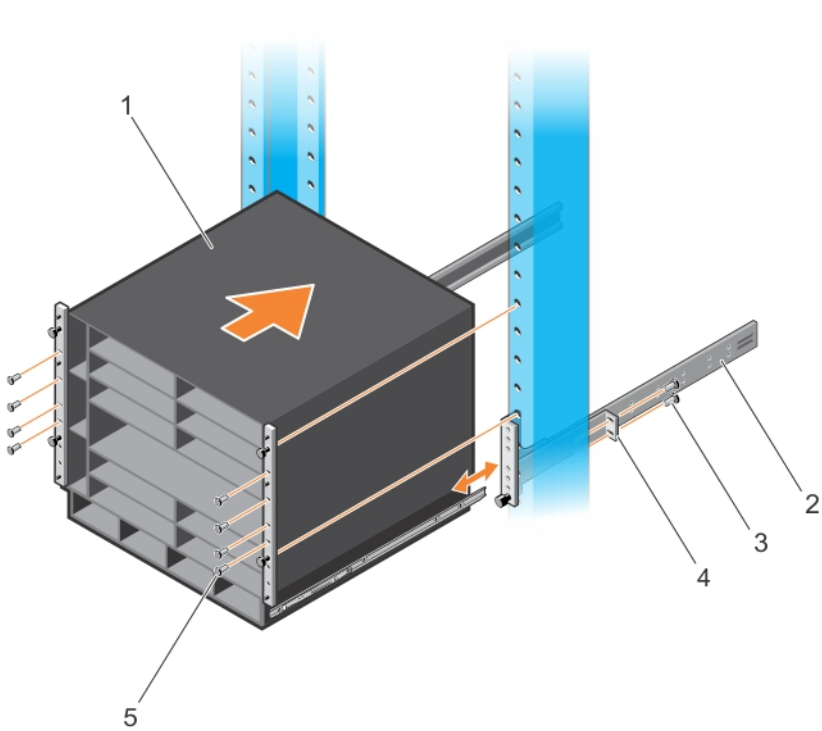

Figure 16. Installing the Chassis with ReadyRails in a Threaded-Hole Rack

Using a Rack Mount Tray (Optional)

You can also use a rack mount tray to install the C9010 switch in a 2- or 4-post rack. Purchase the tray as a separate item.

NOTE: If the use of a rack bar or Dell ReadyRails does not satisfy your C9010 installation requirements, Dell Networking recommends using a rack mount tray to support the weight of a C9010 switch in a 2- or 4-post rack. For information about the chassis weight and other technical specification, see Technical Specifications.

To install a rack mount tray in a rack, follow the instructions provided with the tray kit. Decide where you want to mount the switch in the rack. Position the tray at that height and tighten it to the rack posts using the screws shipped with the tray (items 1 to 4 in Figure 17).

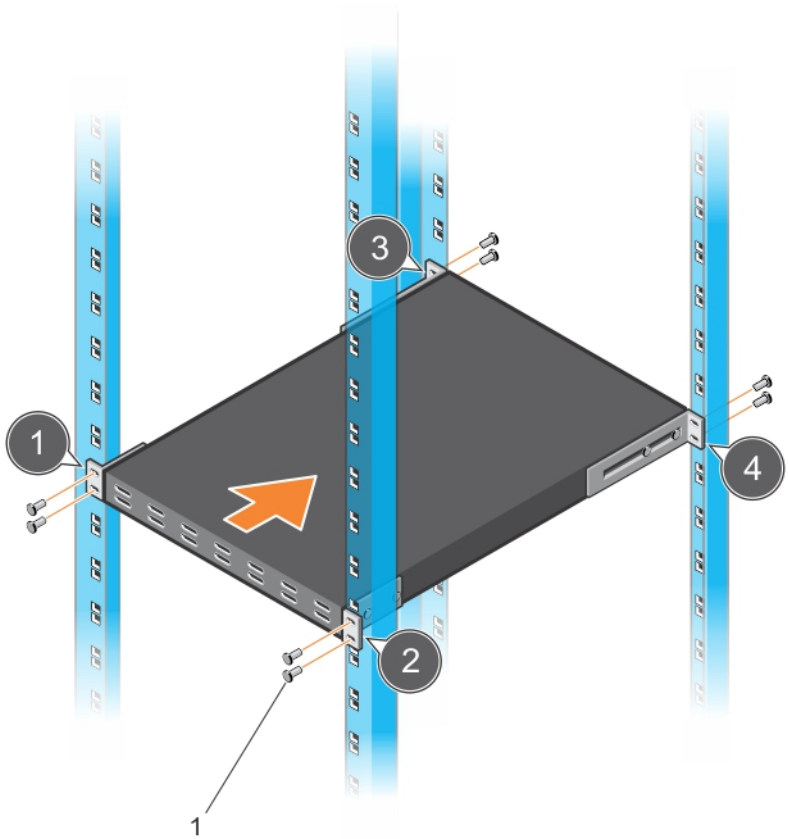

Figure 17. Example of a Mount Rack Tray in a 4-Post Rack

Attaching the Chassis Ground

After you mount the chassis in a rack, ground the device by attaching a chassis ground as follows:

NOTE: The grounding cable is not shipped with the C9010 base configuration and must be ordered separately.

1. Locate the chassis ground lug nut and holes on the bottom left side (facing you) of the chassis.

2. Attach a grounding cable to the chassis lug by inserting a 6-gauge cable (item 1 in Figure 18). Using a hand-crimping tool (Tyco Electronics 58433-3 or equivalent), crimp the lug (item 2 in Figure 18) so that the cable is held securely.

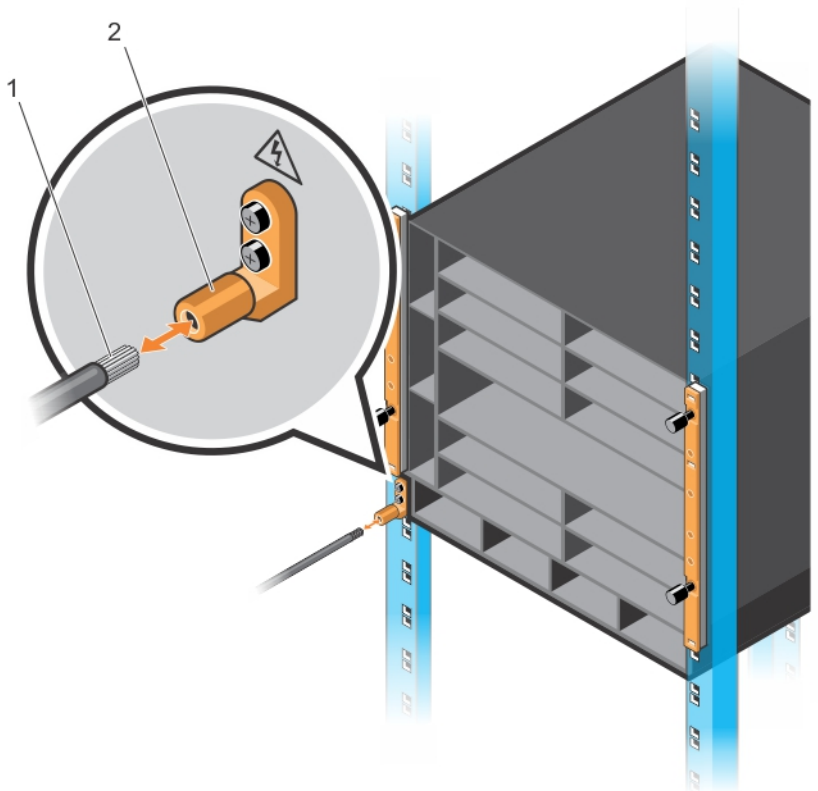

Figure 18. Grounding the Chassis

3. Connect the opposite end of the grounding cable to the nearest grounding post at your site.

Installing a Fan Module

The C9010 switch requires three fan modules for normal operation. Three field-replaceable fan modules are shipped with the base configuration. To ensure proper temperature and airflow control, the three fan modules must always be installed and operating properly.

NOTE: If a fan fails, replace the fan module within two minutes to avoid a shutdown of installed line cards.

1. Slide the first fan module into fan slot 0 by pushing the handle (item 1 in Figure 19) forward into the uppermost fan slot (item 2 in Figure 19).
2. Gently push the front of the module until it clicks into place. The fan module should be flush with the chassis.
3. Repeat Steps 1 and 2 to install the second and third fan modules in fan slots 1 and 2.
4. To remove a fan module, press the orange button on the handle and pull out the module.

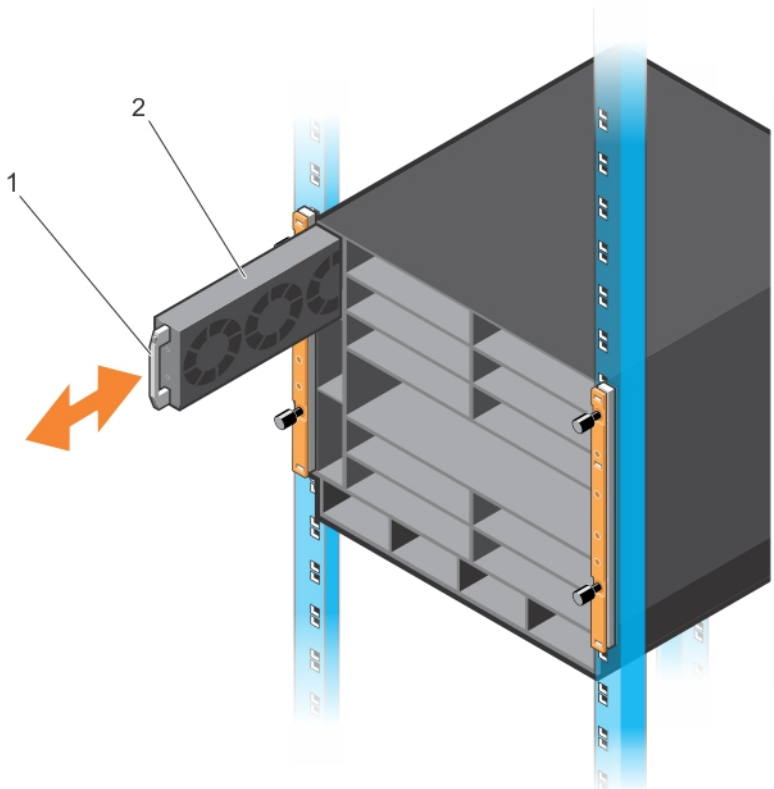

Figure 19. Installing a Fan Module

NOTE: The switch does not have an air filter; ensure that you regularly clean the installation site and the chassis.

NOTE: The fan module LED remains green when the chassis is powered up and the fan module is functioning properly.

Installing RPMs and Line Cards

The C9010 chassis supports up to ten line cards and two route processor modules.

WARNING: Always wear an ESD-preventive wrist or foot-heel ground strap when handling an RPM or a line card. Always place RPMs and line cards on an antistatic surface or in an antistatic bag when not in use or when carrying them. ESD damage can occur when components are mishandled. Do not use the ejector handle to carry an RPM or line card.

CAUTION: Unlock the levers before inserting an RPM or line card into the chassis. After you insert the RPM or line card, fully engage the locking mechanism; without the locking mechanism engaged, you can damage a lower line card when you insert it.

Installing an RPM

Install the fan modules before you install RPMs in a C9010 switch.

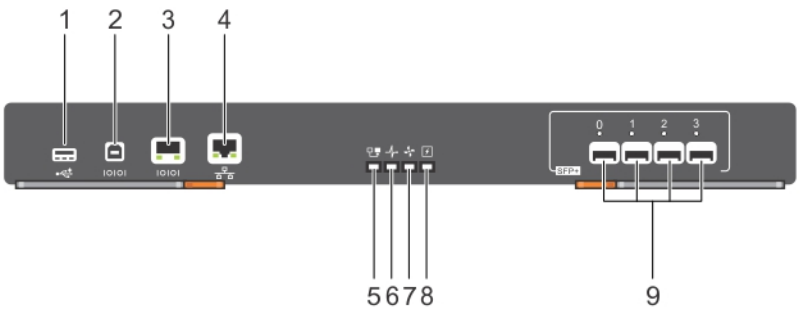

Figure 20. C9010 Route Processor Module

1. USB-A storage port
2. USB-B console port
3. RJ-45 console port
4. 10/100/1000Base-T RJ-45 management port
5. RPM Master LED
6. System LED
7. Fan Status LED
8. PSU Status LED
9. 10GbE SFP+ ports with Link LEDs

Before you install an RPM in the C9010 chassis, review these guidelines:

- Although the C9010 switch can operate with one RPM, Dell Networking recommends two RPMs for redundancy and to provide more bandwidth to each line card. One RPM provides 120 Gigabits of bandwidth to each line card; two RPMs provide 240 Gigabits of bandwidth to each line card.
- If the C9010 operates with only one RPM, you can install the RPM in either slot 10 (the top RPM slot labelled R0) or slot 11 (the bottom RPM slot labelled R1) . If you install two RPMs, the RPM in slot 10 is master and the RPM in slot 11 is standby by default. Refer to Figure 1 for RPM slot locations.
- To control airflow for adequate system cooling and ensure personal safety and electromagnetic interference (EMI) containment during operation, install a blank in an empty RPM slot. Always replace an RPM or a blank panel immediately.
- The blank panels for RPMs and line cards are different sizes (RPM blanks are full-width); be sure to install the correct blank panel in each empty slot.
- RPMs are hot-swappable. The C9010 supports high availability.
- If your system uses two RPMs, both RPMs must have the same software image.

1. Open the left and right ejector levers (item 1 in Figure 21) on an RPM by pressing in the orange tab (item 2 in Figure 21) and rotating it to the right so that both levers snap into the open position.

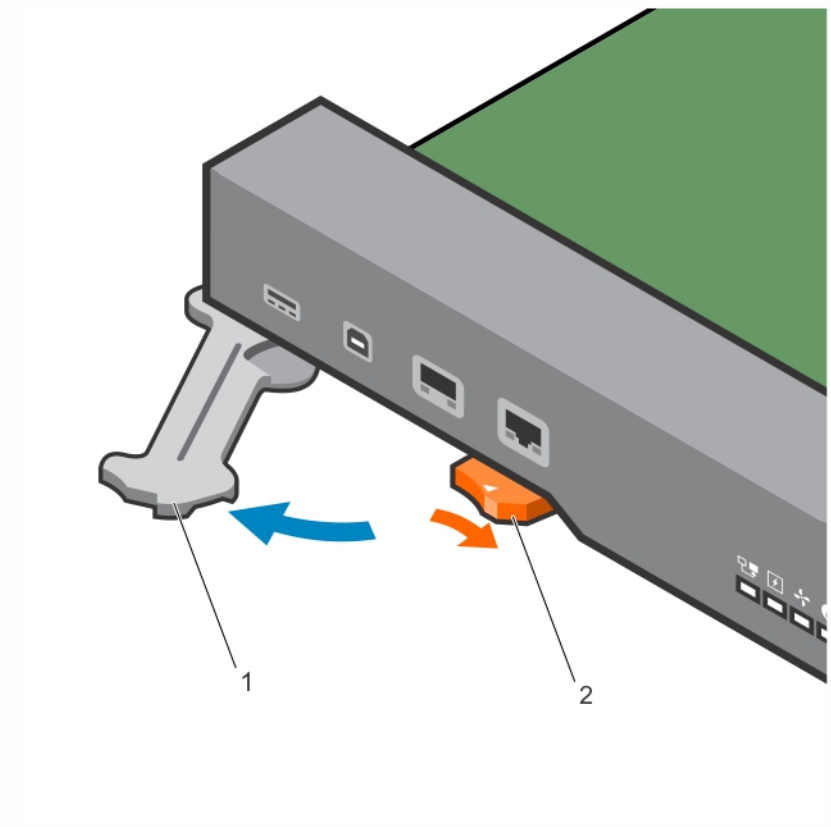

Figure 21. Extending the RPM Ejector Levers

2. Hold the card assembly by the metal carrier edges. Avoid touching the printed circuit board and connector pins.

3. The arrow in slot 10 (item 2 in Figure 22; labelled R0 on the chassis) identifies the slot in which you insert the first RPM. Align the card with the guide and gently slide it into the slot by holding the two ejector levers in the fully open position and pushing the card forward. You should feel the backplane connectors on the RPM engage with the chassis backplane.

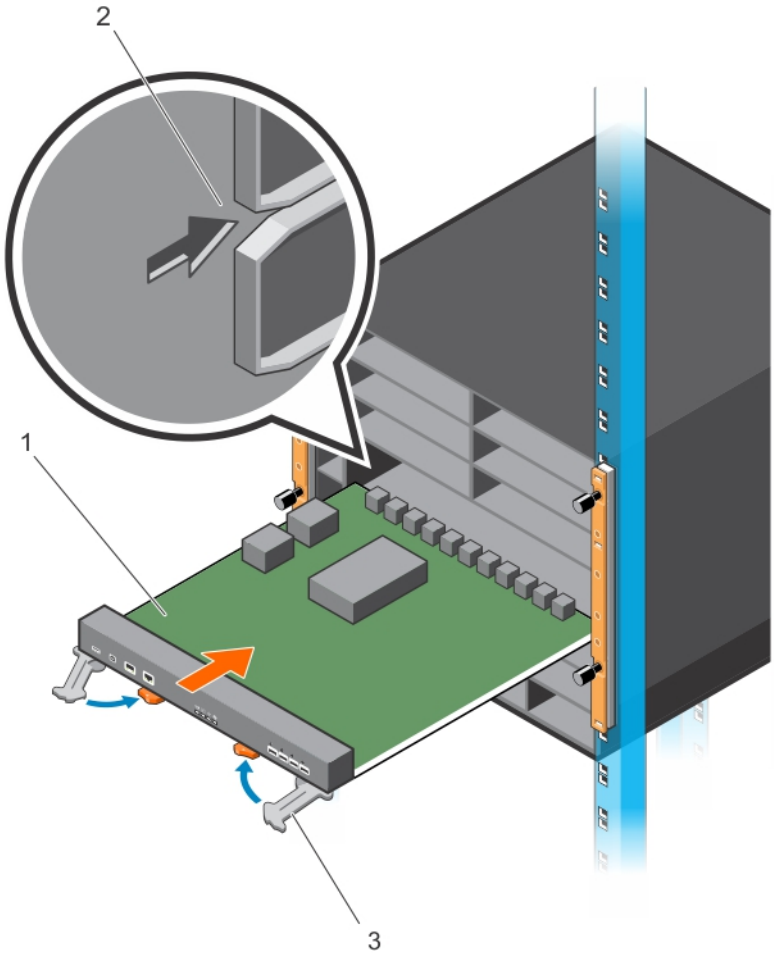

Figure 22. Inserting the First RPM in the Chassis

4. Push in the levers (item 3 in Figure 21) until the thumb tabs pop up and the card is fully inserted in the slot. The ejector levers hide under the card.
5. If the C9010 uses two RPMs, insert the second RPM into slot 11 (labelled R1 on the chassis) below the first RPM by following Steps 1 to 4.
6. If the C9010 uses only one RPM, install a blank panel to cover slot 11. To install the panel, hold the levers and insert the blank to cover the open slot. Push in the lever to secure the blank in place.

Installing a Line Card

Before you install line cards, review these guidelines:

- Install the fan modules before you install line cards in a C9010 switch.
- On the C9010, line card slots are labeled 0 to 9. You can insert any line card type into any line card slot. For the location of line-card slot numbers, refer to C9010 Hardware Description.

- To control airflow for adequate system cooling, personal safety, and EMI containment during operation, install a blank in any empty line card slot. Install an operational line card module or a blank in each line card slot. Always replace a line card or blank panel immediately.
- The blank panels for RPMs and line cards are different sizes (line card blanks are smaller); be sure to install the correct blank panels in each empty slot.
- C9010 line cards are hot-swappable. The C9010 supports high availability.
- Do not press on the port connectors when you install a line card.

Figure 23 shows the types of line cards supported in a C9010.

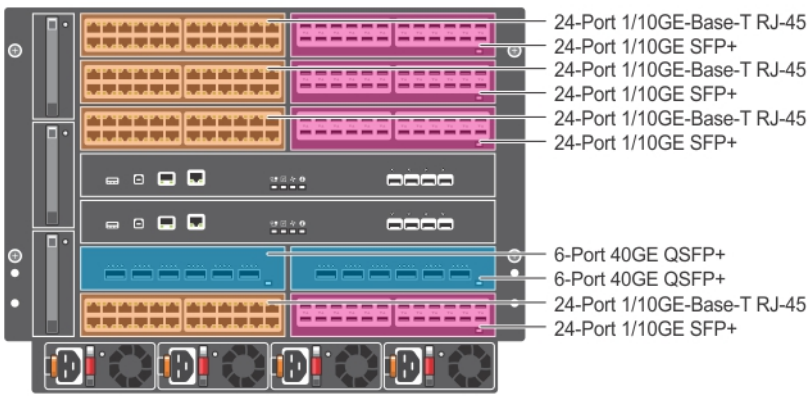

Figure 23. Example of Line Cards Supported in the C9010

1. On a full-width line card, open the left and right ejector levers by pressing the orange thumb tabs. The two ejectors levers spring open.

   On a half-width line card, there is only one ejector lever; open the left lever in the same way by pressing the orange thumb tab so that the lever pops out. For the location of the thumb tabs and ejector levers, see Installing an RPM.
2. Hold the card assembly by the metal carrier edges. Avoid touching the printed circuit board and connector pins.
3. You can insert a line card into any line-card slot. Align the card with the guide in the chassis slot. While holding the ejector lever, press on any convenient edge of the front panel to slide the card until you feel the backplane connectors engage the chassis backplane. Be sure not to press on the port connectors.
4. Push in the lever until the thumb tab pops up and the card is fully inserted in the slot.
5. Repeat Steps 1 to 4 to install additional line cards in the chassis.
6. Install a blank panel in all slots that do not have a line card. Press the orange tab on a blank to open the ejector lever. Holding the lever, insert the blank to cover the open slot. Push in the lever to secure the blank in place.

Installing a Power Supply

The C9010 has four power supply slots at the bottom of the front of the chassis. The C9010 supports only an AC power supply with an IEC 60320 C19 power cable. The power supply is rated as 1450W at 100~120 VAC and 2900W at 200~240 VAC.

NOTE: If a power supply fails, Dell Networking recommends that you replace it as soon as possible. C9010 power supply units are hot-swappable.

PSU Installation Guidelines

- The C9010 requires at least one power supply for normal operation. Dell Networking recommends using additional power supplies for redundancy and additional power depending on the local power grid voltage (100-120 VAC /200-240 VAC).
- C9010 power supplies do not support a combination of power grid types. For example, all PSUs must be powered either by 100~120 VAC or 200~240 VAC, but not both. Do not mix utility input.
- To protect against high-voltage shock, install a power supply blank in all unused power supply slots.
- Connect the AC power supply to the appropriate branch circuit protection as defined by your local electrical codes.
- Verify that the remote power source complies with the system input power specifications.

WARNING: Use only an AC IEC 60320 C19 power cord with the AC power supply. Do not supply power to your system until you install the power supplies, fan modules, RPMs, and line cards.

WARNING: The C9010 relies on the building's installation for short-circuit (overcurrent) protection. Dell Networking recommends using a fuse or circuit breaker of 120 VAC, 20 A U.S. (240 VAC, 16 A international) for AC input on each power supply to ensure its maximum power capacity.

WARNING: The C9010 does not have a main disconnect device. You must provide a suitable disconnecting device in the building installation. Ensure you locate and install the device near the equipment and that it is easily accessible.

PSU Installation Procedure

1. Verify that the PSU switch is in the OFF (down) position.
2. Slide the first power supply into the left-most power supply slot (PSU 0) until the latch (item 1 in Figure 24) snaps in place. For the location of PSU slot numbers, refer to C9010 Hardware Description.
3. Plug an AC power cord (IEC 60320 C19 cable) into the front of the power supply.
4. Plug the power cord into an AC power outlet. When the PSU switch is in the OFF (down) position, the PSU LED for AC input power blinks green to indicate that the PSU is receiving power from the outlet.
5. Repeat Steps 1 to 4 to install additional AC power supplies of the same wattage. Install each additional power supply in the left-most available PSU slot; for example, install the second power supply in PSU slot 1, the third power supply in PSU slot 2, and the fourth power supply in PSU slot 3.
6. Install a blank to cover any open PSU slot.

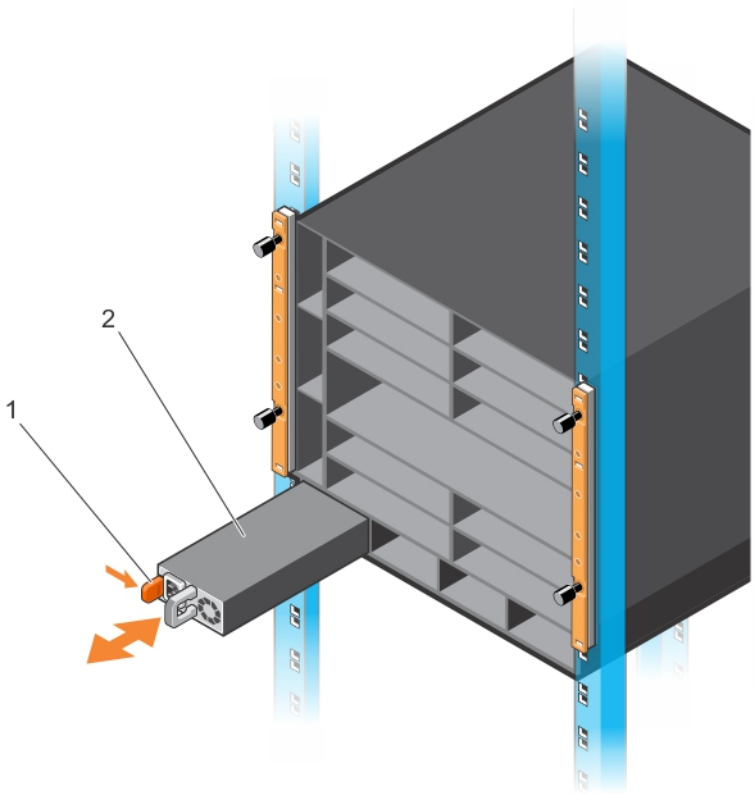

Figure 24. Installing the First Power Supply

Installing the Cable Management System

To organize network cables and minimize the obstruction from cables when you insert, remove, and view chassis components, you can install a cable management system on the front of the chassis. Using the cable management system, you can attach the maximum number of cables in C9010 line card ports.

The cable management system consists of two brackets (items 1 and 2 in Figure 25) and is shipped as part of the C9010 base configuration.

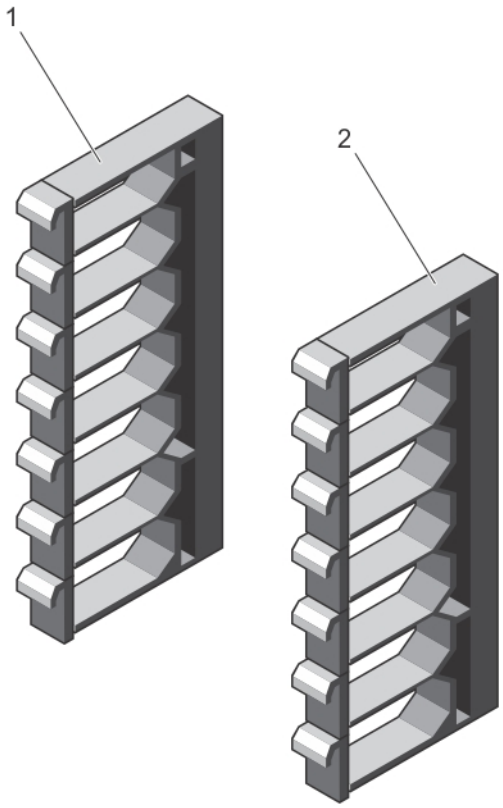

Figure 25. Cable Management System

NOTE: Dell Networking recommends that you install the cable management system after you install the chassis in a rack and all of the chassis components in the chassis.

To install the cable management system, mount both brackets on the right and left sides of the chassis:

1. Align the openings on the inside of a bracket with the pins (item 1 in Figure 26) and thumb screws on each chassis flange.

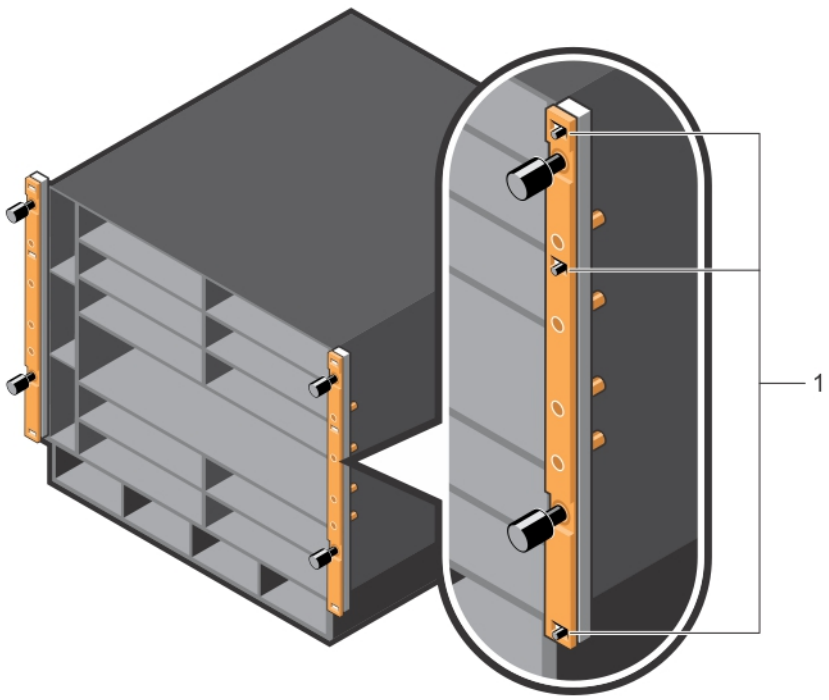

Figure 26. Installing Cable Management Brackets on the Chassis Flanges

2. Press the bracket forward so that the bracket holes cover the pins and thumb screws on the flanges (item 1 in Figure 27). The bracket locks in place as you press it forward.

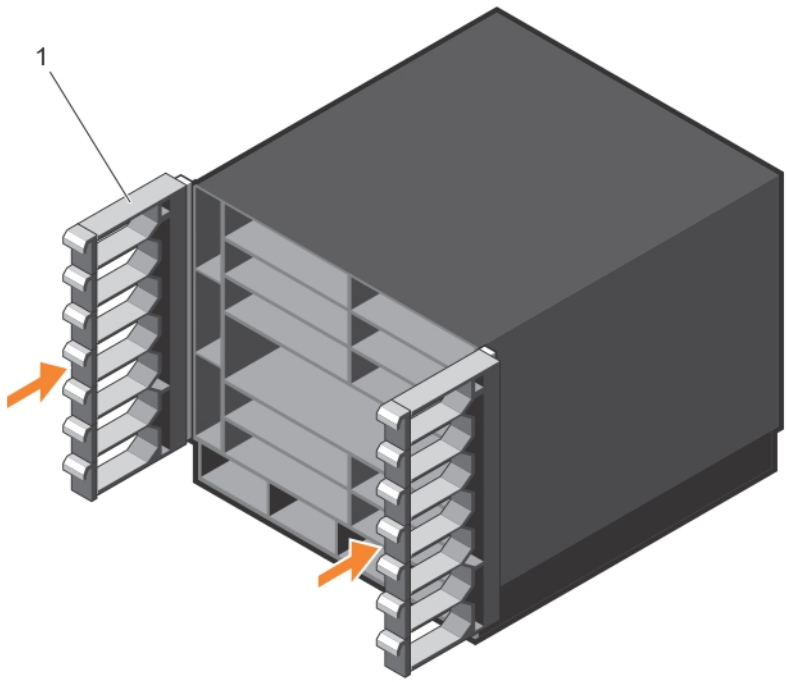

Figure 27. Cable Management Brackets Installed on Chassis

3. To open part of a cable bracket, pull one of the latches forward so that it swings down.
4. To remove a cable bracket, push up the blue button located in the center of a bracket to release it.

When you cable C9010 ports, be sure not to interfere with the airflow from the ventilation holes on the right and left sides of the chassis.

Do not remove the cable management brackets with installed cables. First unplug and remove all cables, then remove the brackets.

Installing the QSFP+ and SFP+ Optics

The C9010 switch may use 40GbE QSFP+ and/or 1/10GbE SFP+ optical ports. You can use a breakout cable in a 40GbE QSFP+ port to split it into four SFP+ optical ports.

CAUTION: ESD damage can occur if the components are mishandled. Always wear an ESD-preventive wrist or heel ground strap when handling the switch and its components.

WARNING: When working with optical fibres, follow all the warning labels and always wear eye protection. Never look directly into the end of a terminated or unterminated fibre or connector as it may cause eye damage.

1. Position the optic correctly over a port. The optic has a key that prevents it from being inserted incorrectly.
2. Insert the optic into the port until it gently snaps into place.

Powering Up the System

Before you supply power to the chassis, Dell Networking recommends that you re-inspect your equipment rack and chassis.

Before Powering Up

Verify that:

- The equipment is properly secured to the rack.
- The equipment rack is properly mounted and grounded.
- The ambient temperature around the unit (which may be higher than the room temperature) is within the limits specified for the C9010. The supported operational temperature is 32° to 113°F (0°C to 45°C). For more detailed environment requirements, see Technical Specifications.
- The airflow into the vents on the right side and out of the vents on the left side of the chassis is unobstructed.
- All protective blank covers are in place.
- The input circuits are correctly sized for the loads and you use sufficient over-current protection devices.
- Each AC power supply unit is correctly installed. A power plug is connected to each AC power connector and the power cord is secure.

CAUTION: Do not power up the switch if no fan module is installed.

CAUTION: The switch has a high line-voltage requirement of 200V.

NOTE: A country/region-specific AC power cable is included in the shipping container for powering up an AC power supply. You must order all other power cables separately.

NOTE: If a power supply fails, you can replace it while the switch is running by hot-swapping another power supply. Power supply units are field-replaceable.

Power Up Sequence

1. Verify that the power source complies with the system input power requirements.
2. Verify that the switch on each AC power supply is in the OFF (down) position and the PSU LED for AC input power blinks green to indicate that each PSU is receiving power from an outlet.
3. Toggle the switch on all AC power supplies to the ON (up) position.
4. The power supply LEDs display solid green (see Figure 32) . If a PSU LED is not solid green:
   - Check that you properly installed the power supply.
   - Verify the power source.
   - If you cannot verify the power supply, power off all power supplies and replace the unit.
5. The fan module LEDs display amber during C9010 bootup, and green when the switch finishes loading the operating system. You are able to hear the air flowing through the chassis. If the fans are not operating properly or air is not flowing through the chassis:
   - Power off all power supplies.
   - Verify that you properly installed the fan module.
   - If the fan module LED remains unlit (see Figure 31), remove and replace the fan module.

After you supply power to the system, the fans operate at medium speed. The green (online) fan module, RPM, and line card LEDs are lit and remain lit as long as the system is receiving power and is operational.

When you turn on power supplies and supply power to the chassis, the system performs a series of power-on self tests (POSTs). RPM and line card LEDs blink as the diagnostic programs run. No user interaction is required. You can observe the process on your console terminal. When the boot process completes, the line card LEDs remain online (green) and the console monitor displays the CLI prompt.

Checking LED Status

After you power on the switch, you can check the system, fan, power status, and port activity using LEDs on the front panel of RPMs, line cards, power supplies, and fan modules.

NOTE: You can also check system status using CLI `show` commands and the Simple Network Management Protocol (SNMP). For more information about these options, refer to the *Dell Networking Command Line Reference and Configuration Guides for the C9000 Series*.

When the C9010 successfully powers up or reloads:

- RPM LEDs display system status and management port activity.
- Line card port LEDs display link status and port activity.
- PSU and fan LEDs display individual PSU and fan operational status.

For RPM LED location, see Installing an RPM. All other LEDs are shown in illustrations in this section.

Table 2. RPM LEDs

LED	Color / Description
RPM master LED	• Solid green — RPM is operating as a master. • Solid amber — RPM is operating as standby.
System LED	• Off — No power • Solid green — Normal operation • Flashing blue — Beacon LED used to locate the module. • Flashing amber — Error condition or reload is in progress.
Fan status LED	• Solid green — Normal operation • Flashing amber — Error condition in a fan module
Power supply status LED	• Solid green — Normal operation • Flashing amber — Error condition in a PSU
SFP+ 10GbE port 0 to 3: Link LED	• Off — No data link activity • Solid green — Link is up and operational. • Flashing green — Link is up and transmitting/receiving data. • Solid amber — 1G port is up and the interface is enabled. • Flashing amber — 1G port is transmitting/receiving data. • Flashing amber (1 second on, 1 second off) — Port beacon used to locate SFP+ port

LED	Color / Description
RJ-45 Management Ethernet port: Link LED (left LED below port)	• Off — No data link activity • Solid green — Link is up and operating at maximum port speed; if auto-negotiated, port is operating at 1G. • Solid amber — Link is up and operating at lower speed; if auto-negotiated, port is operating at 10/100M.
RJ-45 Management Ethernet port: Activity LED (right LED below port)	• Off — No data link activity • Flashing green — Link is up and transmitting/receiving data.

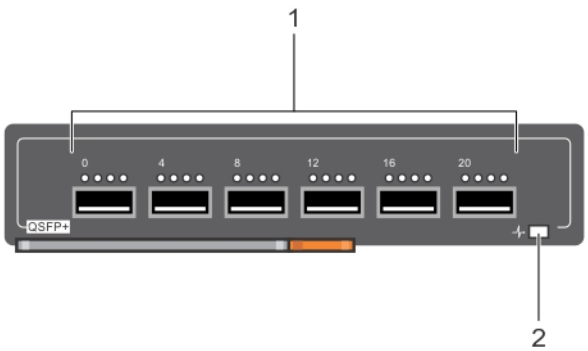

Figure 28. 40GbE QSFP+ Port LEDs

1. 4x10G Port Link/Activity LEDs above each 40GbE QSFP+ port
2. Module LED

Table 3. 40GbE QSFP+ Port LEDs

LED	Color / Description
40GbE Port Link/ Activity LED (leftmost LED)	• Off — No link or interface is disabled. • Solid green — 40G link is up and 40GbE QSFP+ interface is enabled. • Flashing green — 40GbE port is transmitting/receiving data at maximum 40G speed. • Solid amber — 40G link is up but operating at lower speed (less than 40G). • Flashing amber — 40GbE port is transmitting/receiving data at a lower speed (less than 40G). • Flashing amber (1 second on, 1 second off) — Port beacon used to locate port
4x10G Port Link/ Activity LED	• Off — No link or interface is disabled. • Solid amber — 10G link is up and operating at 10G speed. • Flashing amber — 4x10G port is transmitting/receiving data at 10G speed. • Flashing amber (1 second on, 1 second off) — Port beacon used to locate port
Module LED	• Off — No power • Solid green — Normal operation • Flashing blue — Beacon LED is being used to locate the module.

LED	Color / Description
	• Flashing amber — Error condition or reload in progress

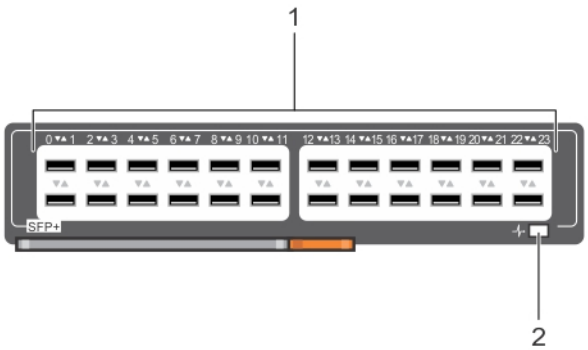

Figure 29. 1/10GbE SFP+ Port LEDs

1. 24 1/10GbE SFP+ ports with Link/Activity LEDs (up and down arrows indicate port numbers)
2. Module LED

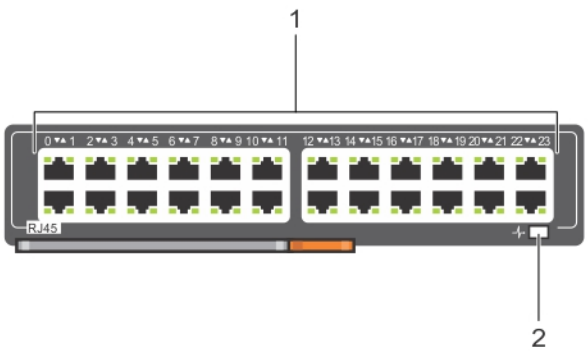

Figure 30. 1/10GbE RJ-45 Port LEDs

1. 24 1/10GbE SFP+ ports with Link/Activity Status LEDs (up and down arrows indicate port numbers)
2. Module LED

Table 4. 1/10GbE SFP+ and 1/10GbE RJ-45 Port LEDs

LED	Color / Description
1/10GbE Port Link/ Activity LED	• Off — No link • Solid green — 10G link is up and 10GbE interface is enabled. • Flashing green — 10GbE port is transmitting/receiving data. • Solid amber — 1G link is up and 1GbE interface is enabled. • Flashing amber — 1GbE port is transmitting/receiving data. • Flashing amber (1 second on, 1 second off) — Port beacon used to locate port
Module LED	• Off — No power • Solid green — Normal operation

LED	Color / Description
	• Flashing blue — Beacon LED used to locate the module • Flashing amber — Error condition or reload in progress

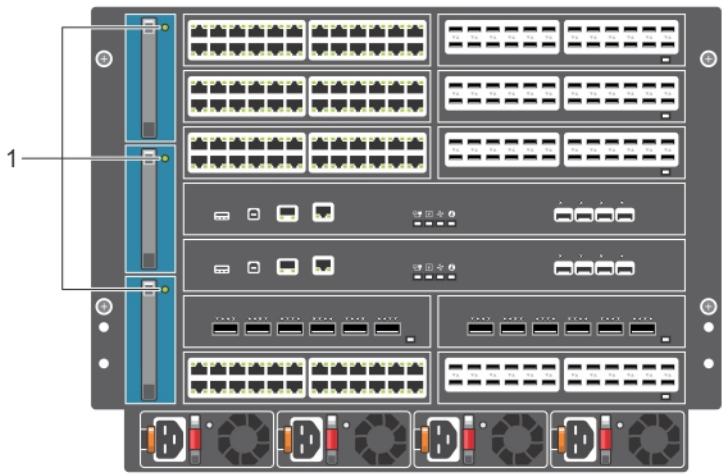

Figure 31. Fan Module LED

1. Fan status LED

Table 5. Fan LED

LED	Color / Description
Fan status	• Solid green — Normal operation; fan module is receiving power. • Solid amber — Error condition or reload in progress • Off — Fan module is not receiving power.

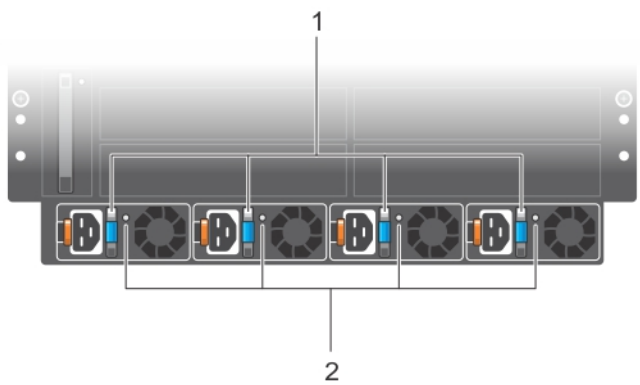

Figure 32. PSU LEDs

1. PSU LED: DC output (on handle)
2. PSU LED: AC input power

Table 6. PSU LEDs

LED	Color / Description
PSU: DC output	• Solid green — Normal DC power output • Solid amber — Alarm: PSU is not operational due to a fault condition. • Flashing amber — Alarm: Overheating condition
PSU: AC input power	• Solid green — Normal operation; PSU is receiving power. Switch on the PSU is in the ON (up) position. • Flashing green — Alarm: PSU is receiving power, but DC output is disabled. Switch on the PSU is in the OFF (down) position. • Off — PSU is receiving power outside of the supported range and is not operational.

4

Configuring the Software

After you install the switch in a rack and power it up, you must access the switch to perform the initial software configuration using the command-line interface (CLI) or bare metal provisioning (BMP) after you connect to a network. This chapter describes how to configure the C9010 using the CLI.

BMP allows the C9010 to receive a Dell Networking OS image and startup configuration file with initial software settings, including IP address, from a DHCP server. For more information about BMP, refer to the *Dell Networking Open Automation Guide: Configuration and Command Line Reference*. To connect a BMP-enabled switch to a network so that it can search the network for a DHCP server, see Connecting the Switch to the Network.

To use the CLI to configure the C9010:

1. Connect a console terminal to a console port on the master RPM to access the CLI.
2. Configure the enable password.
3. Configure a host name.
4. Connect the switch to a network.
5. Configure the switch for remote access.
6. Configure Layer 2 (data link) mode.
7. Create a VLAN.

For complete information about how to configure and monitor your system, refer to the *Dell Networking Configuration Guide for the C9000 Series*. For the latest documentation and firmware updates, refer to the Dell Support website at http://www.dell.com/support.

Connecting a Console Monitor

To perform the initial software configuration, connect an external console to a console port on the master RPM in a C9010 switch. An RPM provides two types of console interfaces: RJ-45 and USB-B.

The RJ-45 and USB-B console ports are located on the left side of the RPM as you face the chassis.

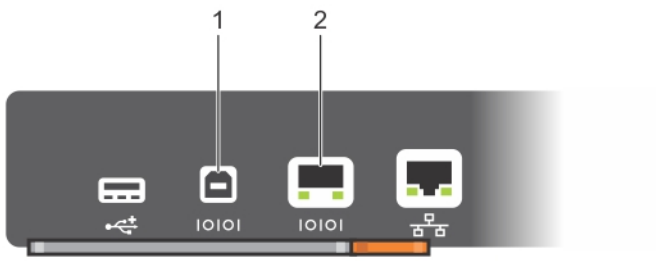

Figure 33. Console Ports on a Route Processor Module

1. USB-B console port
2. RJ-45 console port

Setting RJ-45 Console Access

The RJ-45 console port is an asynchronous serial port. If you connect a console to this port, it must support asynchronous transmission.

NOTE: Before connecting a console, be sure that a terminal emulation program is already installed on your PC console.

1. Install an RJ-45 copper cable into the console port. To connect the C9010 console port to a terminal server, use the DB-9 to RJ-45 serial console cable shipped with the C9010.
2. Connect the other end of the cable to the DTE terminal server.
3. Set your terminal or terminal emulation mode to VT100 with the following settings:
   - 9600 baud rate
   - No parity
   - 8 data bits
   - 1 stop bit
   - Window Terminal Emulator option set to NO
   - 24 lines x 80 characters
   - No flow control

RJ-45 Cable and Adapter Pin Assignments

To configure and monitor your system, you can connect to a terminal port, PC serial port, or a terminal server by using the RJ-45 console port on the RPM. An RJ-45 Ethernet cable is required to connect to the console port.

The following table describes the pinouts for the RJ-45 console port.

Table 7. Pin Assignments for the RJ-45 Console Port

Pin	Serial	Input/Output
1	NC (unused)	-
2	DTR	Output
3	TxD	Output
4	GND	-

Pin	Serial	Input/Output
5	GND	-
6	RxD	Input
7	DSR	Input
8	NC (unused)	-

RJ-45 Console Access with a DB-9 Adapter

You can connect to the console through the RJ-45 console port using an RJ-45 to RJ-45 rollover cable and an RJ-45 to DB-9 female DTE adapter (labeled *TERMINAL*) to a terminal server (for example, a PC).

Table 8. Pin Assignments Between the Console and DTE Terminal Server (DB-9 Adapter)

Console Port	RJ-45 to RJ-45 Rollover Cable	RJ-45 to RJ-45 Rollover Cable	RJ-45 to DB-9	Terminal Server Device
Signal	**RJ-45 Pinout**	**RJ-45 Pinout**	**DB-9 Pin**	**DB-9 Pin**
RTS	1	8	8	CTS
DTR	2	7	6	DSR
TxD	3	6	2	RxD
GND	4	5	5	GND
GND	5	4	5	GND
RxD	6	3	3	TxD
DSR	7	2	4	DTR
CTS	8	1	7	RTS

RJ-45 Console Access with a DB-25 Adapter

You can connect to the console port through the RJ-45 console port using an RJ-45 to RJ-45 rollover cable and an RJ-45 to a DB-25 female DTE adapter.

Table 9. Pin Assignments Between the Console and a DTE Terminal Server (DB-25 Adapter)

Console Port	RJ-45 to RJ-45 Rollover Cable	RJ-45 to RJ-45 Rollover Cable	RJ-45 to DB-25 Modem Adapter	Terminal Server Device
Signal	**RJ-45 Pinout**	**RJ-45 Pinout**	**DB-25 Pinout**	**Signal**
RTS	1	8	5	CTS
DTR	2	7	6	DSR
TxD	3	6	3	RxD
GND	4	5	7	GND
GND	5	4	7	GND
RxD	6	3	2	TxD
DSR	7	2	20	DTR
CTS	8	1	-	RTS

Setting USB-B Console Access

For the location of the USB-B console port, refer to C9010 Console Ports.
The terminal settings are the same for the USB-B and RJ-45 console port:

- 9600 baud rate
- No parity
- 8 data bits
- 1 stop bit
- No flow control

When you connect a console device to the USB-B port, it becomes the primary connection and sends all messages to the USB-B port.

1. Power on the PC.
2. Install the necessary USB device drivers (you will need an Internet connection) for your USB-to-serial console cable kit. For assistance, contact Dell Networking Technical Support.
3. Connect the USB-A end of cable into an available USB port on the PC.
4. Connect the USB-B end of cable into the USB-B console port on the C9010 RPM.
5. Power on the system.
6. Open your terminal software emulation program to access the system.
7. Set the terminal connection settings:
   - 9600 baud rate
   - No parity
   - 8 data bits
   - 1 stop bit
   - No flow control

NOTE: Only one of the console ports can be active at a time; a USB console takes priority over an RJ-45 console by default. When a USB host (PC) is plugged into the USB-B console port, the C9010 hardware automatically switches over to use the USB console. When you remove the USB cable or the PC deactivates the USB connection, the C9010 automatically switches to the RJ-45 console interface.

Initial Software Configuration

After you connect a console terminal, the CLI prompt appears (`Dell>_`). It is not necessary to enter a default user name and password to log in.

Although a version of the Dell Networking operating system is pre-loaded on the chassis, the system is not configured when you power up the first time (except for the default host name, which is `Dell`).

- To configure the basic software settings (such as an host name and password) and connect to a network, refer to the following sections in this chapter.
- To configure additional software features for the switch to communicate with local routers and the Internet, refer to the *Dell Networking C9000 Series Configuration Guide*.

To perform the initial software configuration, gather the following information from your network administrator:

- Enable password

- Telnet password
- Switch IP address
- Subnet mask (IP netmask)
- Default gateway (router)

Command Modes

After you install the hardware and the boot process completes, the console monitor displays the CLI prompt for the EXEC command mode.

To configure the switch, you must move linearly through command modes; for example:

Prompt	CLI Command Mode
`Dell>`	EXEC Enter `enable` to access EXEC Privilege mode.
`Dell#`	EXEC Privilege Enter `configure` to access CONFIGURATION mode.
`Dell(conf)#`	CONFIGURATION Enter `configure terminal batch` to access CONFIGURATION BATCH mode.
`Dell(conf-b)#`	CONFIGURATION BATCH

Enter the `exit` command to move back up one command mode level. Enter the `end` command to move directly to EXEC Privilege mode.

Port Numbering

On the C9010, port numbers are written above ports on a line card. All line cards are hot-swappable.

For an example of port numbering on a 40GbE QSFP+, 1/10GbE SFP+, and 1/10GbE RJ-45 line card, see Checking LED Status.

On the 6-Port 40GbE QSFP+ line card, ports operate by default in 40GbE mode. If you use a breakout cable, each port can operate in 10G mode. 40GbE ports are numbered in multiples of four, starting with zero; for example, 0, 4, 8, 12, and so on. When you install a breakout cable, the resulting four 10GbE ports are numbered with the remaining numbers. For example, 40GbE port 0 contains 10GbE ports 0, 1, 2, and 3; 40GbE port 4 contains 10GbE ports 4, 5, 6, and 7.

Configuring the Enable Password

To access EXEC Privilege mode, use the `enable` command. By default, the enable password is `calvin`.

Configure a new password as a basic security measure. When using a console connection, EXEC Privilege mode is unrestricted by default. To access the console using a VTY connection, you must configure a password. There are two types of enable passwords:

- `enable password` stores the password in the running/startup configuration using a DES encryption method.

- `enable secret` stores the password in the running/startup configuration by using a stronger, MD5 encryption method.

Dell Networking recommends using the `enable secret` password.

- Create a password to access EXEC Privilege mode.

  CONFIGURATION mode

  ```
  Dell(conf)# enable [password | secret] [level level] [encryption-type]
  password
  ```

  - *level* is the privilege level and is not required. The default is 15.
  - *encryption-type* specifies how a password is entered and is not required. The default is 0, which allows you enter the password as clear text. (Other valid values allow you to enter an encrypted password using a DES or MD5 hash.)

Configuring a Host Name

The host name appears in the prompt. The default host name is `Dell`. Host names can start with a letter or number, end with a letter or number, and have characters, letters, digits, and hyphens in the string.

- Create a new host name.

  CONFIGURATION mode

  ```
  Dell(conf)# hostname name
  ```

Connecting the Switch to the Network

After you configure a host name and enable password, connect to a network through the 10/100/1000 Base-T RJ-45 management port on the master RPM for remote management.

The RJ-45 network management port is located on the left side of the RPM as you face the chassis. Use a supported RJ-45 cable for a network connection.

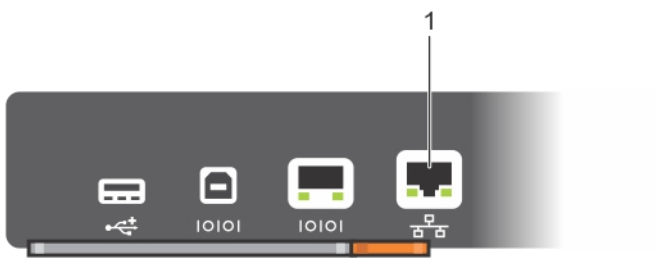

Figure 34. RJ-45 Network Management Port

1. RJ-45 network management port

NOTE: If you are using bare metal provisioning (BMP) to configure the switch, you can connect to a network to locate a DHCP server. BMP allows the C9010 to search the network for a DHCP server from which it can receive a Dell Networking OS image and startup configuration file with initial software settings, including IP address. For more information about BMP, refer to the *Dell Networking Open Automation Guide: Configuration and Command Line Reference*.

Accessing the Switch Remotely

You can configure the C9010 so that it can be accessed remotely over a Telnet connection.

The C9010 uses a dedicated management port on the master RPM and a management routing table that is separate from the IP routing table. To configure the switch for Telnet access:

1. Configure an IP address for the management port.
2. Configure a management route with a default gateway.
3. Configure a user name and password.

Configuring the Management Port IP Address

To access the switch remotely, manually assign IP addresses to the management ports. You can later configure the use of a DHCP server to automatically assign IP addresses.

NOTE: Assign different IP addresses to each RPM management port.

1. Enter INTERFACE mode for the Management port.

   CONFIGURATION mode

   ```
   Dell(conf)# interface ManagementEthernet 0/0
   ```

2. Assign an IPv4 or IPv6 address to the interface.

   INTERFACE mode

   ```
   Dell(conf-if-ma-0/0)# ip address {ipv4-address | ipv6-address}/mask
   ```

   - *ip-address* is an address in dotted-decimal format (A.B.C.D).
   - *mask* is a subnet mask in /prefix-length format (/ xx).

3. Enable the interface.

   INTERFACE mode

   ```
   Dell(conf-if-ma-0/0)# no shutdown
   ```

Configuring a Management Route

Define a path from the C9010 to the network from which you are accessing the switch remotely. Management routes are separate from IP routes and are only used to manage the C9010 through the management port.

- Configure an IPv4 or IPv6 management route to the network from which you are accessing the switch.

  CONFIGURATION mode

  ```
  Dell(conf)# management route {ipv4-address | ipv6-address}/mask gateway
  ```

  – *ip-address* is the network address in dotted-decimal format (A.B.C.D).

– *mask* is a subnet mask in /prefix-length format (/ xx).
– *gateway* is the next hop for network traffic originating from the management port.

Configuring a Username and Password

To access the C9010 remotely, configure a system user name and password.

- Configure a user name and password to access the switch remotely.
  CONFIGURATION mode

  ```
  Dell(conf)# username username password [encryption-type] password
  ```

  An *encryption-type* parameter is not necessary because it is 0 by default, which allows you to enter the password in clear text.

Configure Layer 2 (Data Link) Mode

To enable Layer 2 data transmissions on a specified interface, use the `switchport` command in INTERFACE mode.

You cannot configure switching or Layer 2 protocols, such as the Spanning Tree Protocol (STP), on an interface unless the interface has been set to Layer 2 mode.

1. Enter interface configuration mode.
   CONFIGURATION mode

   ```
   Dell(conf)# interface tengigabitethernet 1/6
   ```

2. Enable the interface.
   INTERFACE mode

   ```
   Dell(conf-if-te-1/6)# no shutdown
   ```

3. Place the interface in Layer 2 (switching) mode.
   INTERFACE mode

   ```
   Dell(conf-if-te-1/6)# switchport
   ```

To view the interfaces in Layer 2 mode, enter the `show interfaces switchport` command in EXEC or EXEC Privilege mode:

```
Dell# show interfaces switchport
```

Splitting QSFP+ Ports into SFP+ Ports

On a 6-Port 40GbE QSFP+ line card, you can split a single 40GbE QSFP+ port into four 10GbE SFP+ ports using one of the supported breakout cables. For a list of supported optics, contact your Dell Networking representative or reseller.

A 40GbE (quad) port must be in a default configuration before you can split it into four 10GbE SFP+ ports. When you split the port, the 40GbE interface configuration is lost in the running configuration. The CLI split-port change immediately takes effect due to the dynamic fan-out feature; it is not necessary to reload the system. Be sure that you also remove the 40GbE port from other L2/L3 feature configurations.

- Configure the switch to recognize the port mode change.

CONFIGURATION mode

```
Dell(conf)# linecard number port number portmode quad
```

- `linecard number port number` specifies the line card and 40GbE port to be split. The line card range is 0 to 11; the port range is 0 to 20.
- `portmode quad` configures a 40GbE port to operate in 4x10G mode.

For example: `Dell(conf)# linecard 0 port 5 portmode quad`

Creating a VLAN

The default VLAN is VLAN 1 (by default) and is stored in the startup configuration.

You can configure a different VLAN number as the default VLAN. You cannot delete or disable the default VLAN 1; you cannot assign it an IP address. Only untagged interfaces can belong to the default VLAN.

When you configure an interface, the `switchport` command automatically places it in the default VLAN as an untagged interface. All switchport interfaces must belong to at least one VLAN. To remove a switchport from the default VLAN, configure it as a tagged or untagged member of another VLAN or remove the switchport configuration.

- Create a VLAN
  CONFIGURATION mode

  ```
  Dell(conf)# interface vlan vlan-id
  ```
- Display all VLANs.
  EXEC Privilege mode

  ```
  Dell# show vlan vlan-id
  ```

Assigning Interfaces to a VLAN

You can only assign interfaces in Layer 2 mode to a VLAN using the `tagged` and `untagged` commands. To place an interface in Layer 2 mode, use the `switchport` command. A port can be an untagged member of a single VLAN or a tagged member of multiple VLANs. When you place an interface in Layer 2 mode using the `switchport` command, the interface is automatically configured as untagged and placed in the default VLAN (VLAN 1).

- Tagged ports append an 802.1Q tag to frames on egress and accept only tagged frames on ingress (untagged frames are dropped). You must connect tagged ports to VLAN-aware devices.
- Untagged ports do not append an 802.1Q VLAN tag to frames on egress and do not accept tagged frames on ingress (tagged frames are dropped). You must connect untagged ports to VLAN-unaware devices. To remove an untagged port from the default VLAN, remove the switchport configuration.

To assign an interface to a VLAN:

1. Enter the VLAN ID to enter configuration mode and assign an interface.
   CONFIGURATION mode

   ```
   Dell(conf)# interface vlan vlan-id
   ```

   The range of VLAN ID numbers is from 1 to 4094.
2. Assign a switchport interface to a VLAN as a tagged or untagged member.

VLAN INTERFACE mode

```
Dell(conf-vl-10)# [tagged | untagged] slot/port-range
```

Where *slot/port-range* specifies a C9010 line card and either a single port number, a port range, or a combination of both for auto-LAG configuration. The range of slot numbers is from 0 to 11. In line card slots 0 to 9, the range of port numbers is from 0 to 23; in RPM slots 10 and 11, the range of port numbers is from 0 to 3.

Enter a port range with or without spaces; for example, `tagged interface tengigabitethernet 0/1-5` or `tagged interface tengigabitethernet 0/1 - 5`. You can enter up to six comma-separated ranges or port numbers; for example, `tagged interface tengigabitethernet 0/1-2,8,10-12,15`.

3. Display all switchport interfaces and the VLANs to which they belong.
   EXEC Privilege mode

```
Dell# show vlan
```

To view only the interfaces that are in Layer 2 mode, enter the `show interfaces switchport` command in EXEC Privilege mode or EXEC mode.

To move a port interface to another VLAN, add it to the desired VLAN as either a tagged or untagged member.

Assigning an IP Address to a VLAN

Because VLANs are a Layer 2 feature, you must assign an IP address to a VLAN interface in order for physical interfaces on different VLANs to communicate and route traffic.

You cannot assign an IP address to the default VLAN 1.

The `shutdown` command in INTERFACE mode does not affect Layer 2 traffic on a VLAN interface.

- Configure an IP address and mask on a VLAN interface.
  VLAN INTERFACE mode

```
Dell(conf-if-vl-10)# ip address ip-address mask [secondary]
```

Next Steps

After you perform the initial software configuration on a C9010, you can configure L2/L3 and other software features. For detailed information, refer to the *C9000 Series Configuration and CLI Guides*.

5

Dell Networking Support

The Dell Networking Support site provides a range of documents and tools to assist you with effectively using Dell Networking equipment and mitigating the impact of network outages. Through the support site you can obtain technical information regarding Dell Networking products, access software upgrades and patches, download available management software, and manage your open cases. The Dell Networking support site provides integrated, secure access to these services.

To access the Dell Networking Support site, go to https://www.dell.com/support/. To display information in your language, scroll down to the bottom of the web page and select your country from the drop-down menu.

- To obtain product-specific information, enter the 7-character service tag or 11-digit express service code of your C9010 switch or a C9010 line card and click Submit.

  To view the chassis service tag or express service code on a C9010, pull out the tag (item 1 in Figure 35) located on the shelf in RPM card slot 11 (see Figure 1) or enter the `show chassis` command from the command-line interface. The service tag on a C9010 line card is located on the bottom of the module.
- To receive additional kinds of technical support, click Contact Us. On the Contact Information web page, click Technical Support.

To access C9000 Series documentation, go to https://www.dell.com/manuals/.

To search for drivers and downloads, go to https://www.dell.com/drivers/.

To participate in Dell community blogs and forums, go to https://www.dell.com/community.

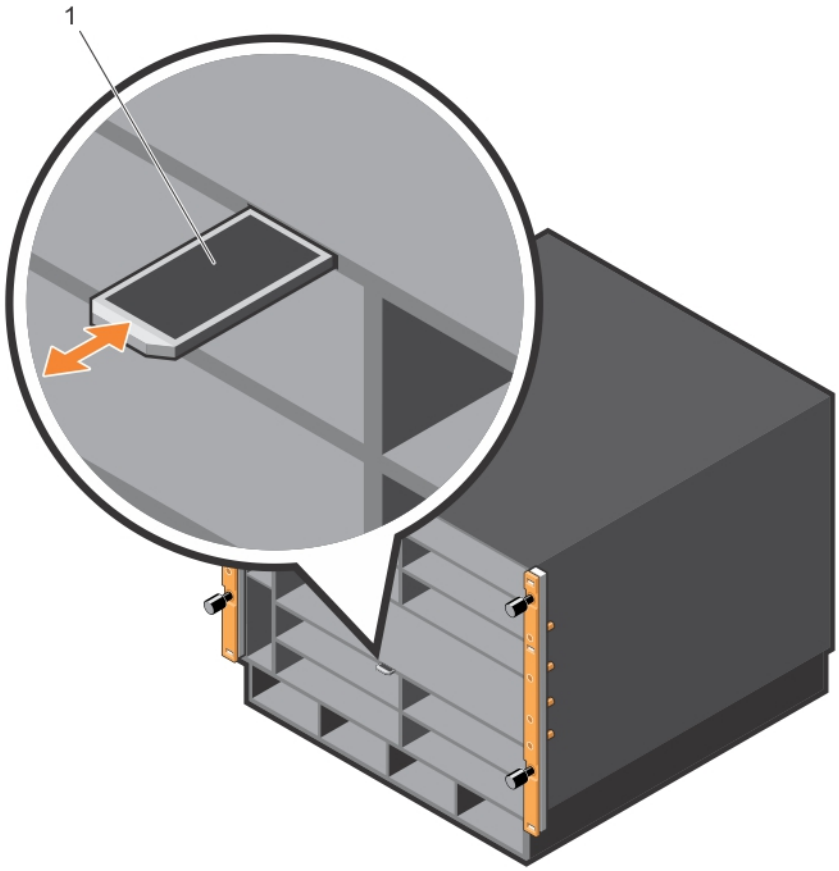

Figure 35. C9010 Service Tag

6

Technical Specifications

The following tables describe the technical specifications for the C9010 switch.

Table 10. Chassis Physical Design

Parameter	Specifications
Height	13.9 inches (35.26 cm)
Width	17.4 inches (44.20 cm)
Depth	18.0 inches (45.70 cm)
Chassis weight	55 lbs (24.95 kg) empty
	152 to 165 lbs (68 to 74.84 kg) fully loaded, depending on the type of line cards installed

Table 11. Environmental Parameters

Parameter	Specifications
Operational temperature	32° to 113°F (0°C to 45°C)
Non-operational (storage) temperature	-40° to 158°F (-40°C to 70°C)
Relative humidity	5% to 95% (non-condensing)

Table 12. AC Power Requirements

Parameter	Specifications
Nominal input voltage	100/120 VAC 50/60Hz and 200/240 VAC 50/60Hz
Maximum AC power-supply input current (based on 1450 W output for 100/120 V and 2900 W output 200/240 V lines)	16 A @ 100 VAC per AC power supply
	14 A @ 120 VAC per AC power supply
	16 A @ 200 VAC per AC power supply
	14 A @ 240 VAC per AC power supply
Maximum system power input (using four power supply units)	2,950 KVA
Maximum system power consumption	2,950 W
Maximum system thermal output	10,066 BTU/hour